Playhouse

EXIT Panorama

Panorama 100

50.52.01.00

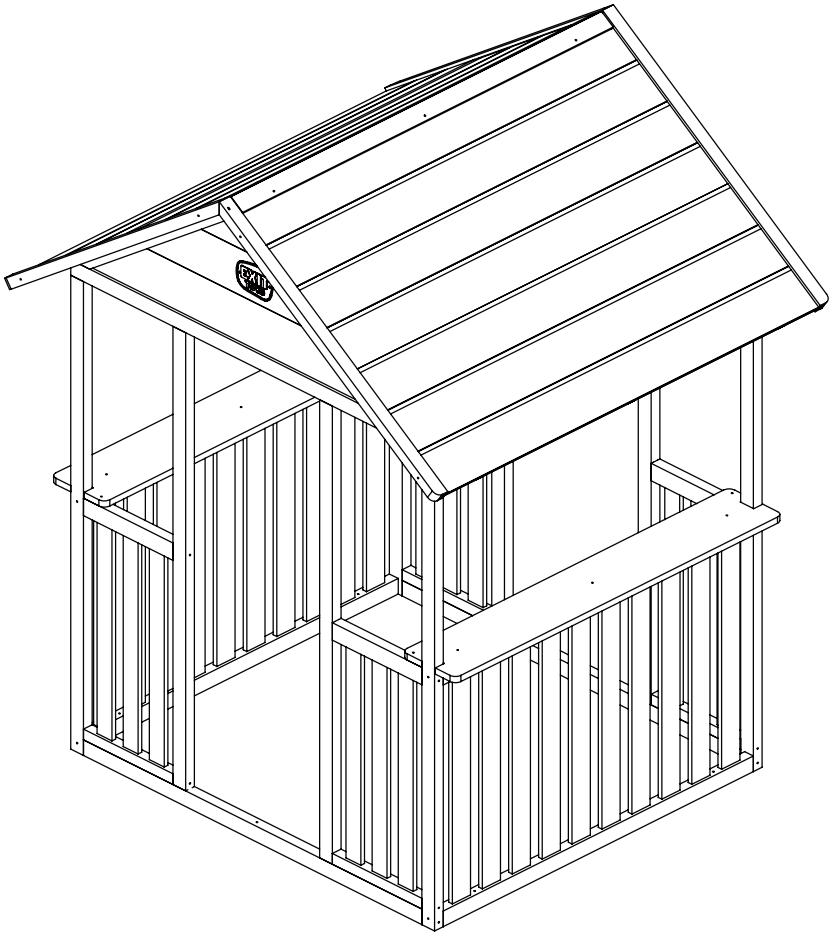

2x
MAX:50kg
TOTAL:100kg

OUTDOOR USE ONLY

WARNING
Warning. Not suitable for children under 24 months. Warning. Max 2 users inside. Warning.Do not climb on counter and roof.

FSC
100%
Wood
FSC® C161901

ASSEMBLY VIDEO

SCAN ME!

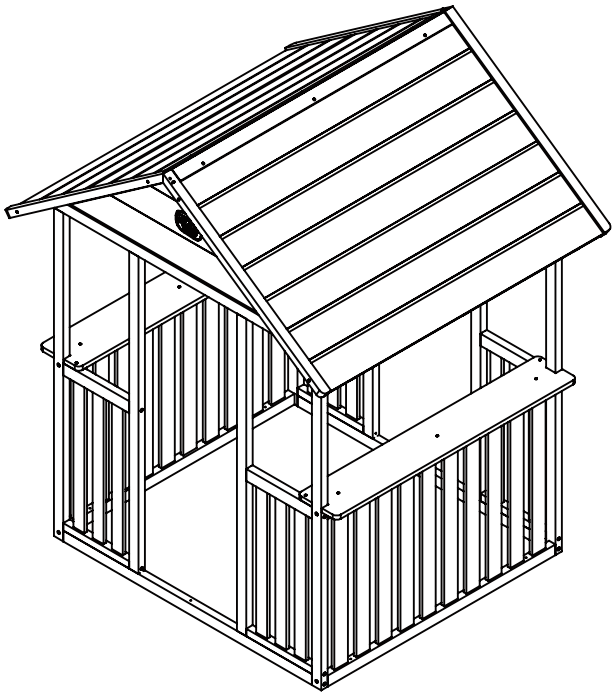

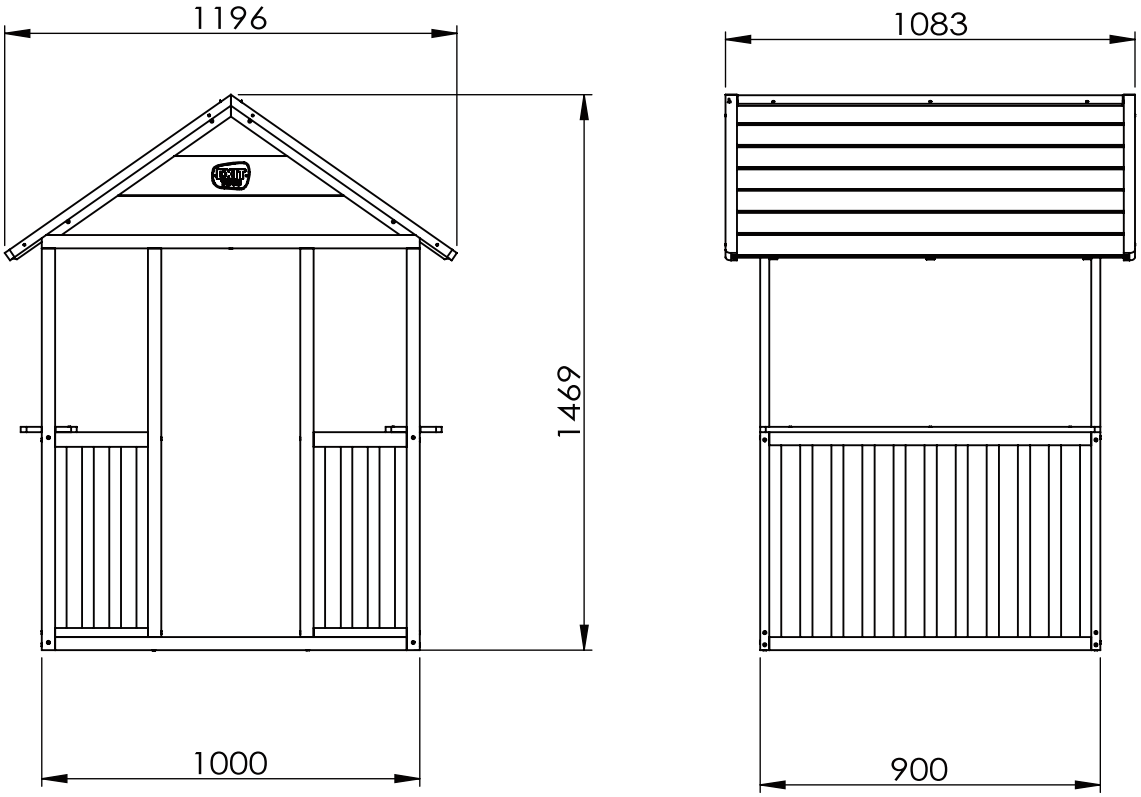

19kg

1

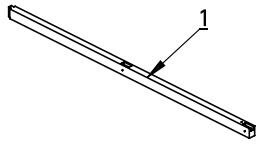

68.63.00.01 | 4x

2

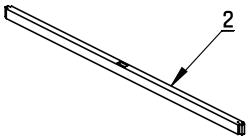

68.63.00.02 | 4x

3

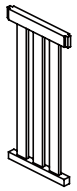

68.63.00.03 | 4x

4

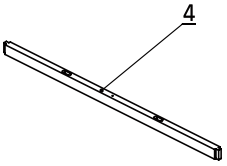

68.63.00.04 | 2x

5

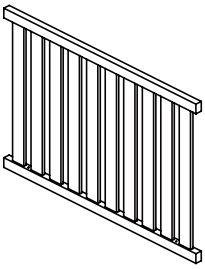

68.63.00.05 | 2x

6

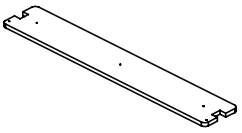

68.63.00.06 | 2x

7

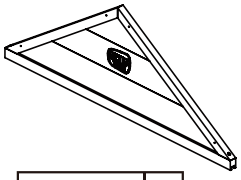

68.63.00.07 | 1x *

8

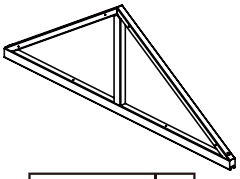

68.63.00.08 | 1x

9

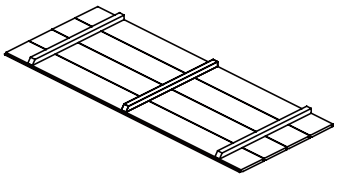

68.63.00.09 | 2x

10

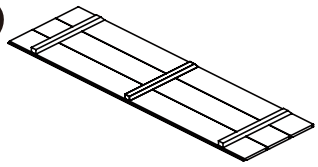

68.63.00.10 | 2x

11



68.63.00.11 | 2x

12



68.63.00.12 | 2x

13

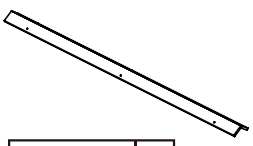

68.63.00.13 | 1x

50.52.01.00

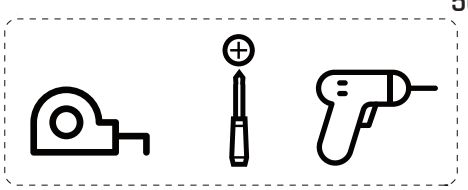

*

BOX REFERENCE:	XX.XX.XX
PRODUCTION ID:	XXXXXXXX





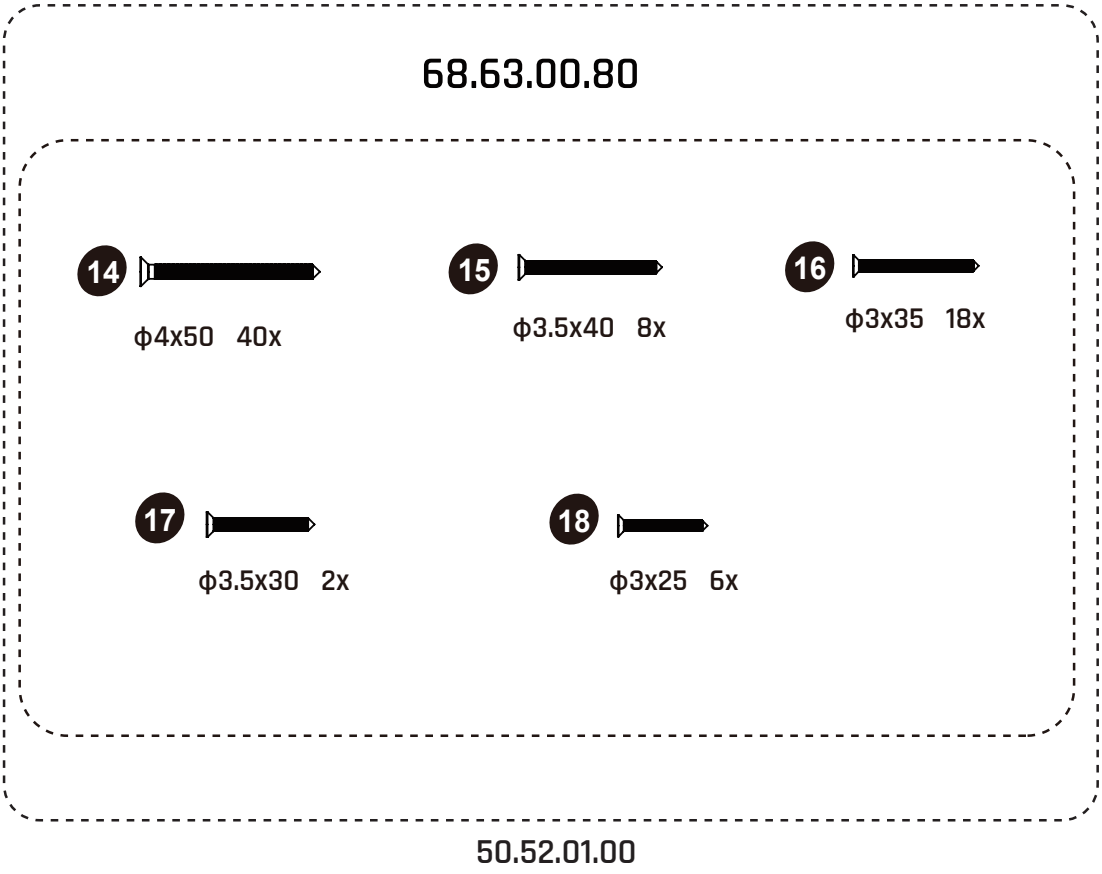
68.63.00.80
14
ϕ4x50 40x
15
ϕ3.5x40 8x
16
ϕ3x35 18x
17
ϕ3.5x30 2x
18
ϕ3x25 6x
50.52.01.00

1

X4

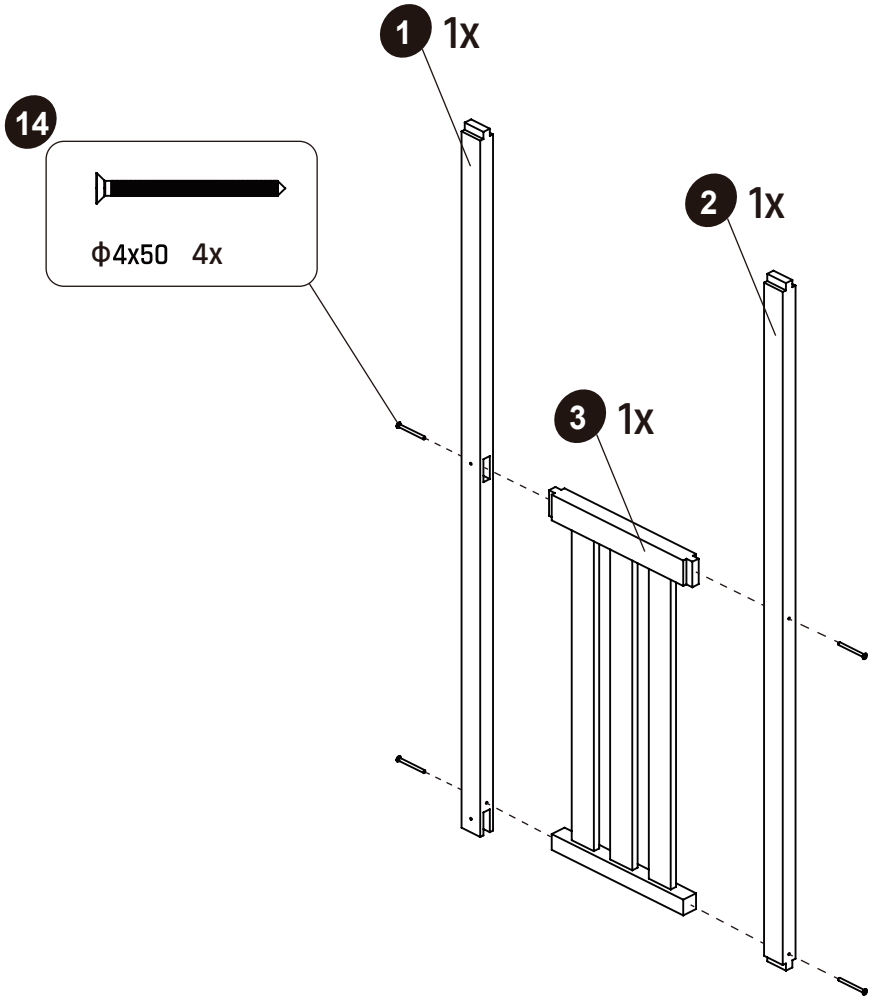

2

X2

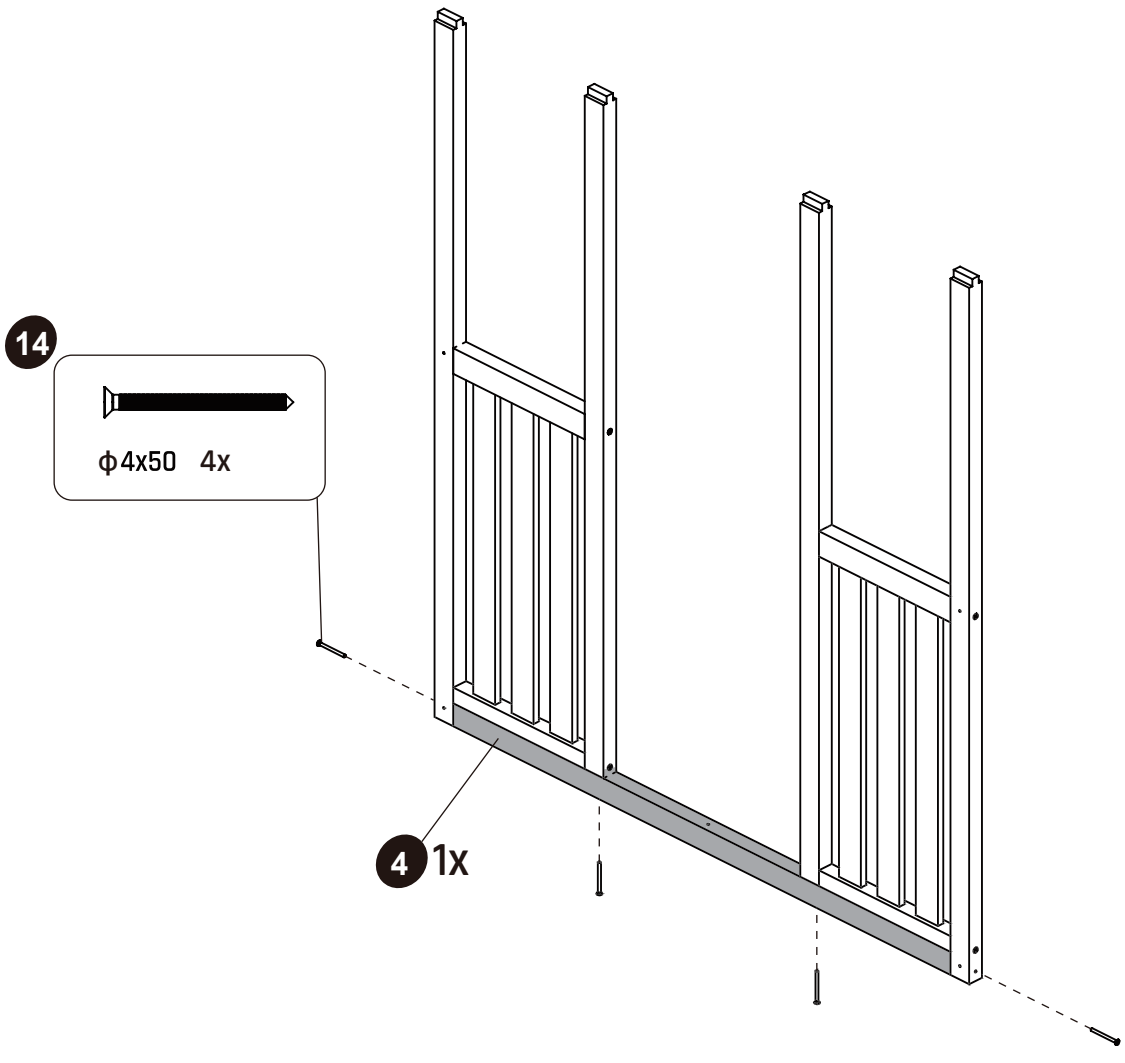

3

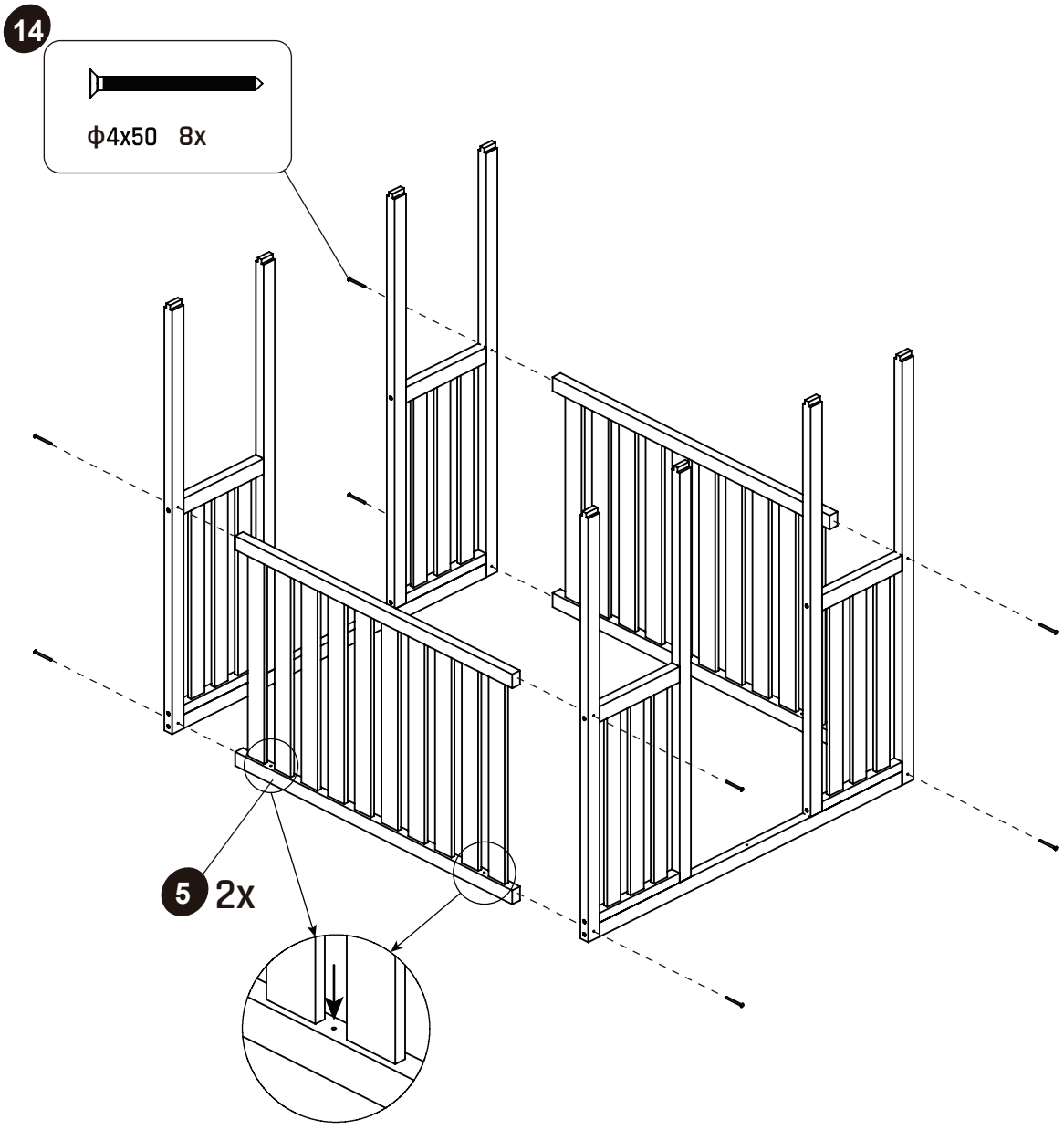

4

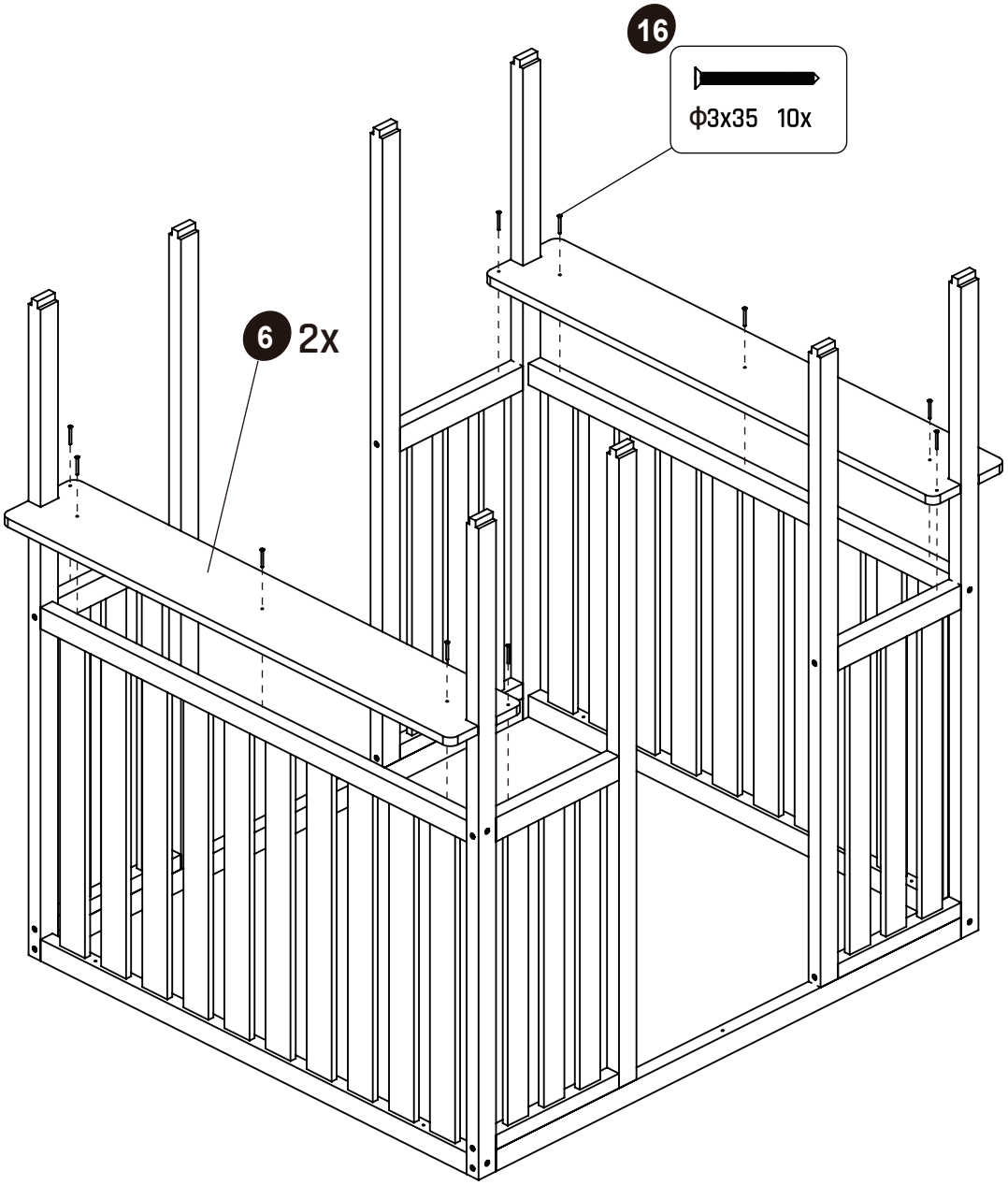

5

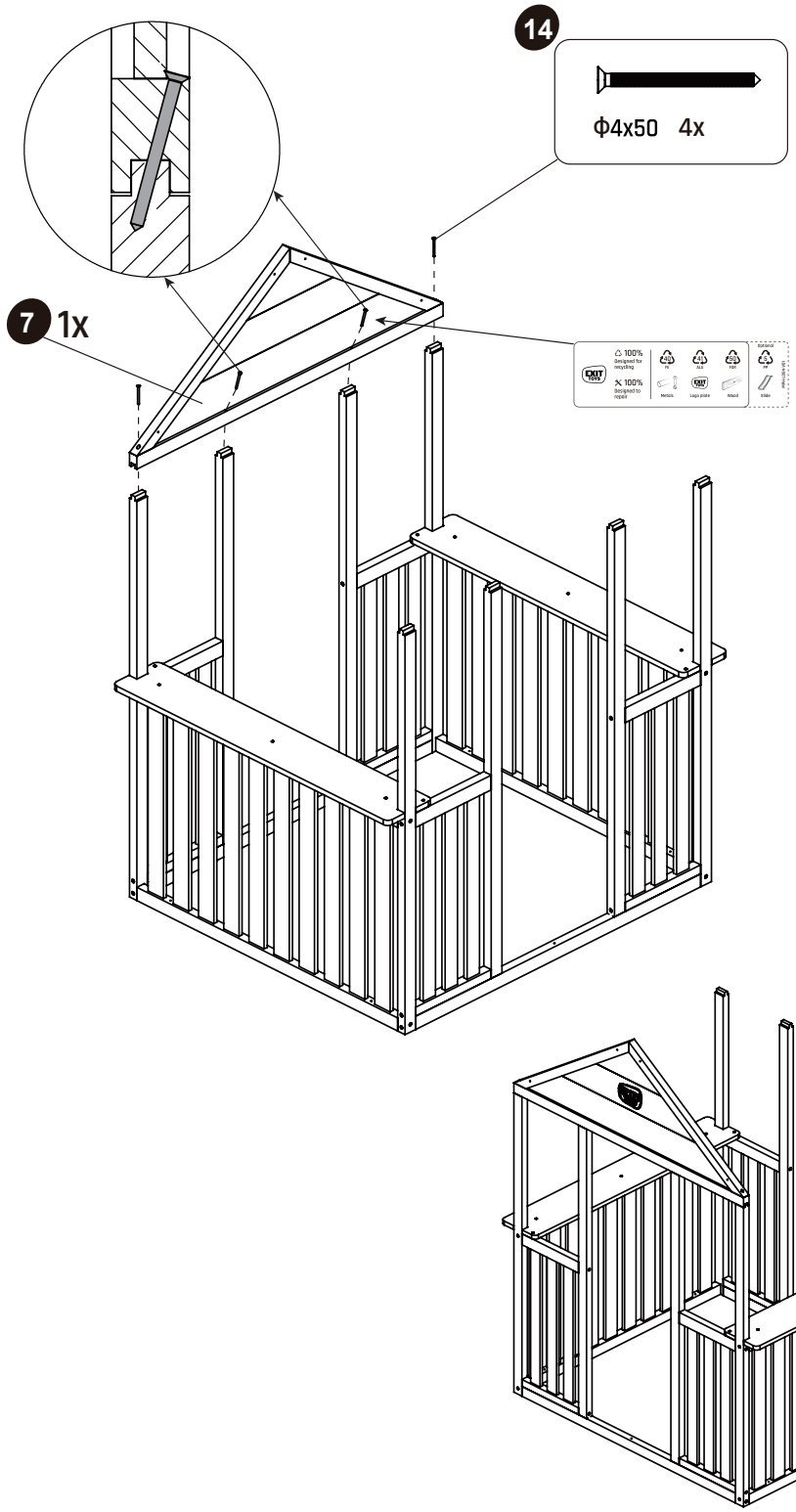

6

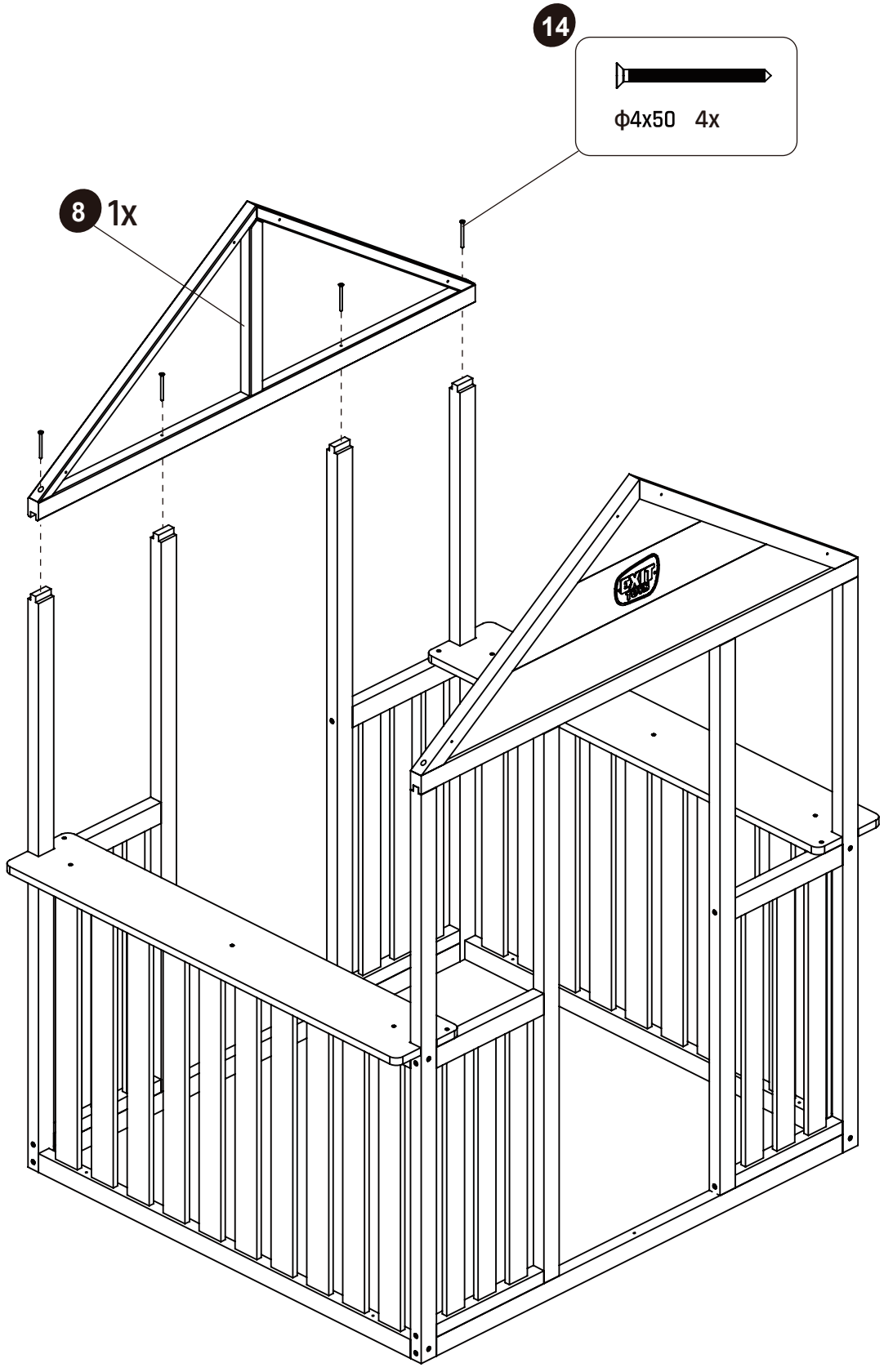

7

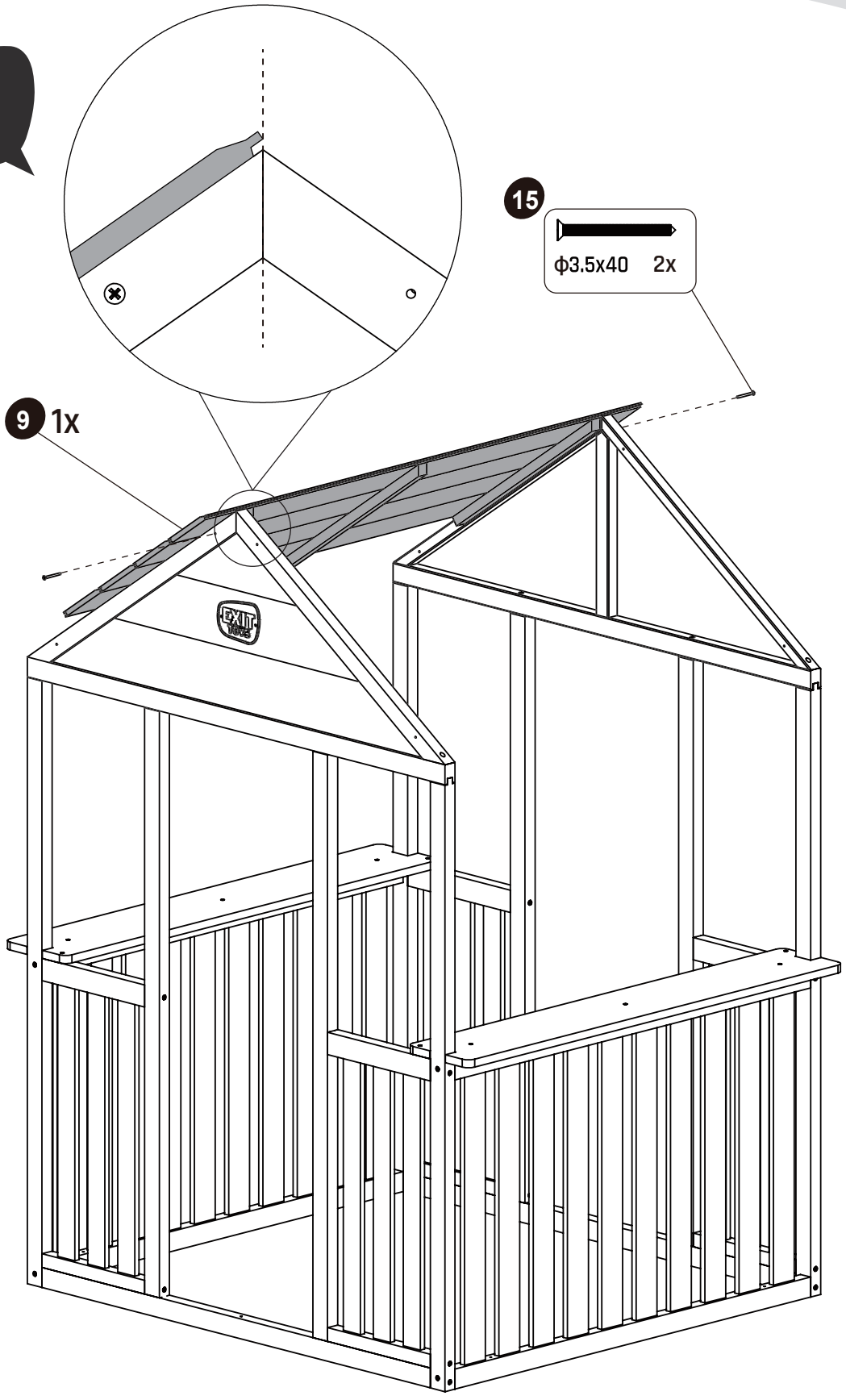

8

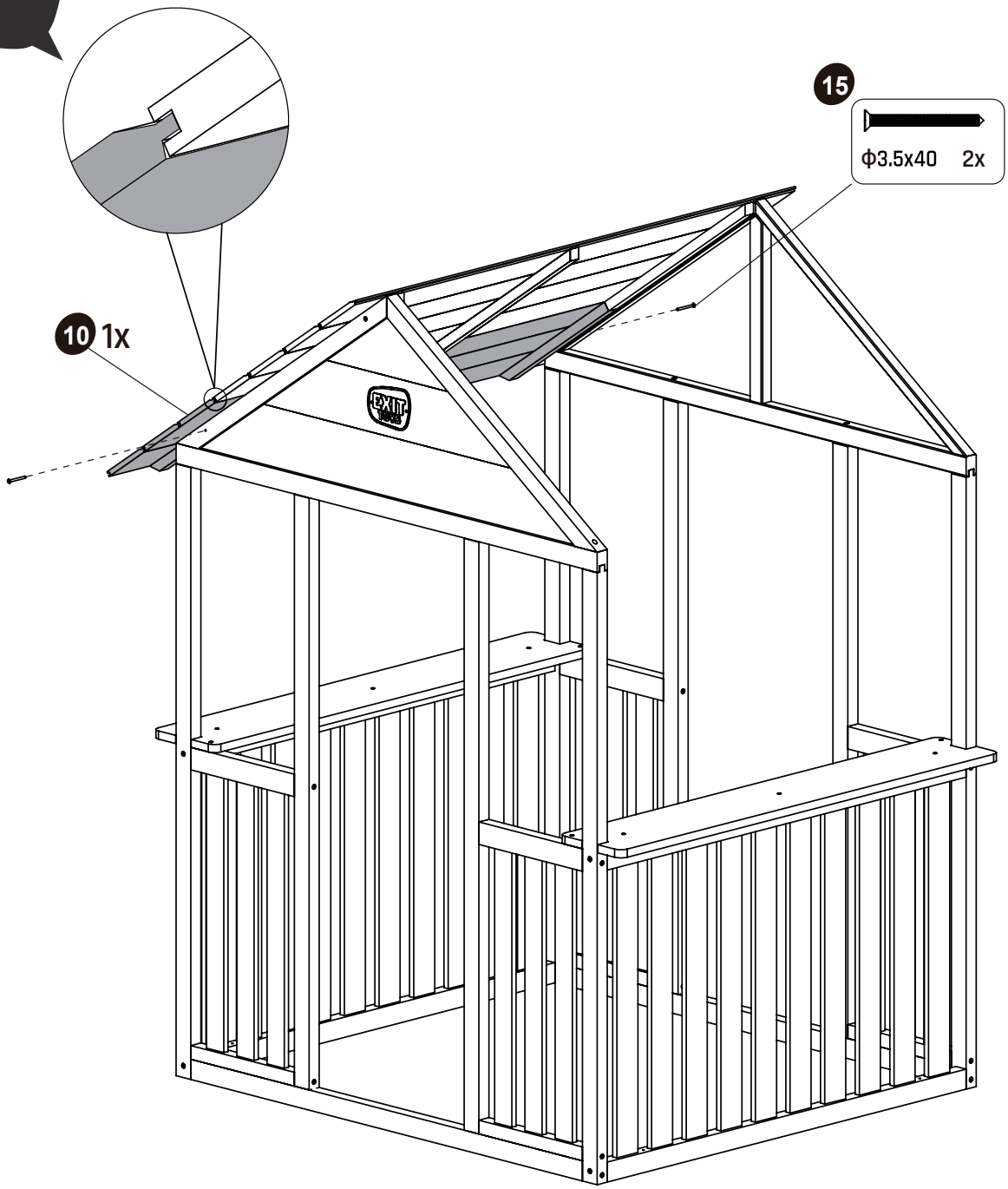

9

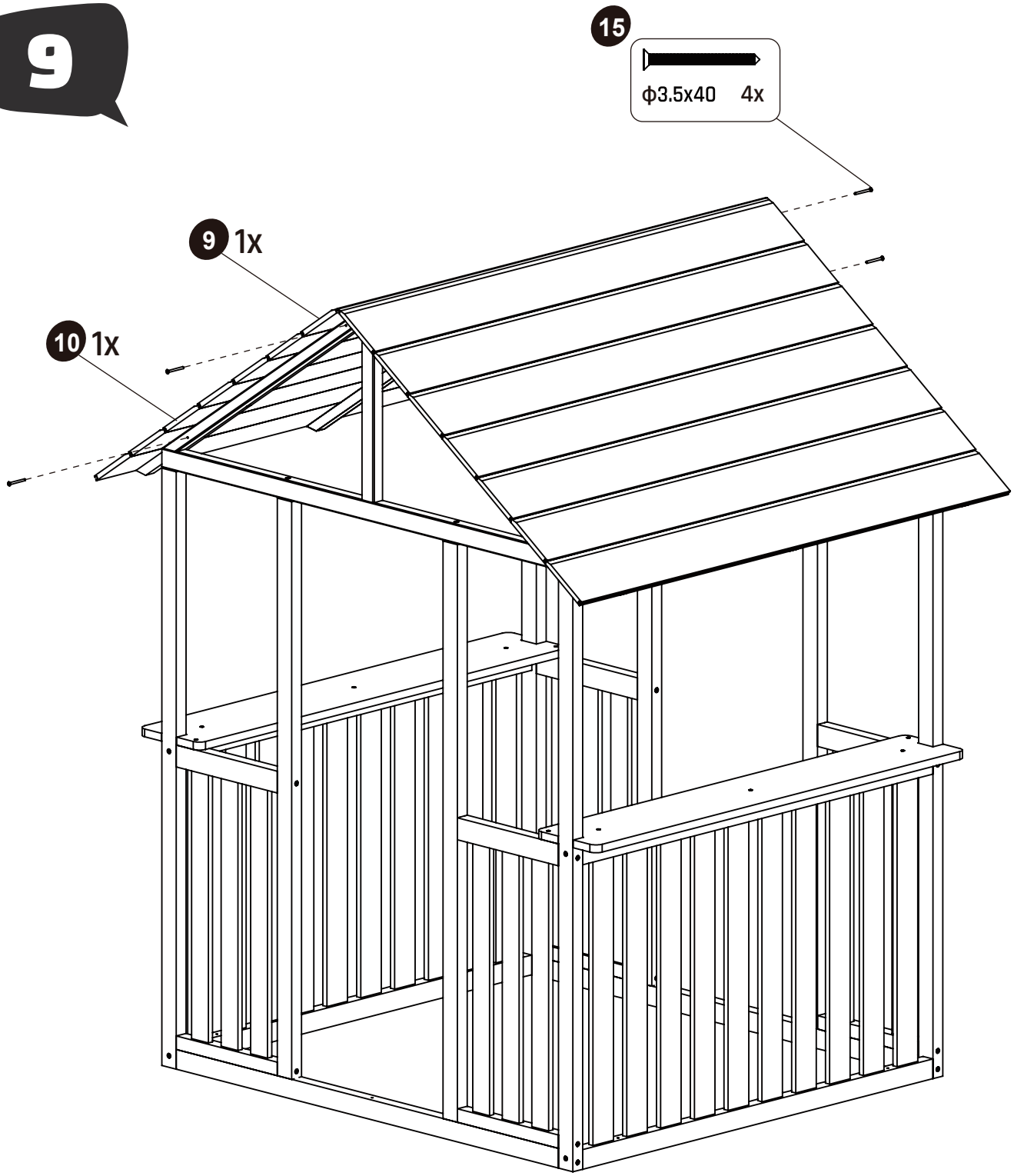

10

10a

17 ϕ3.5x30 1x

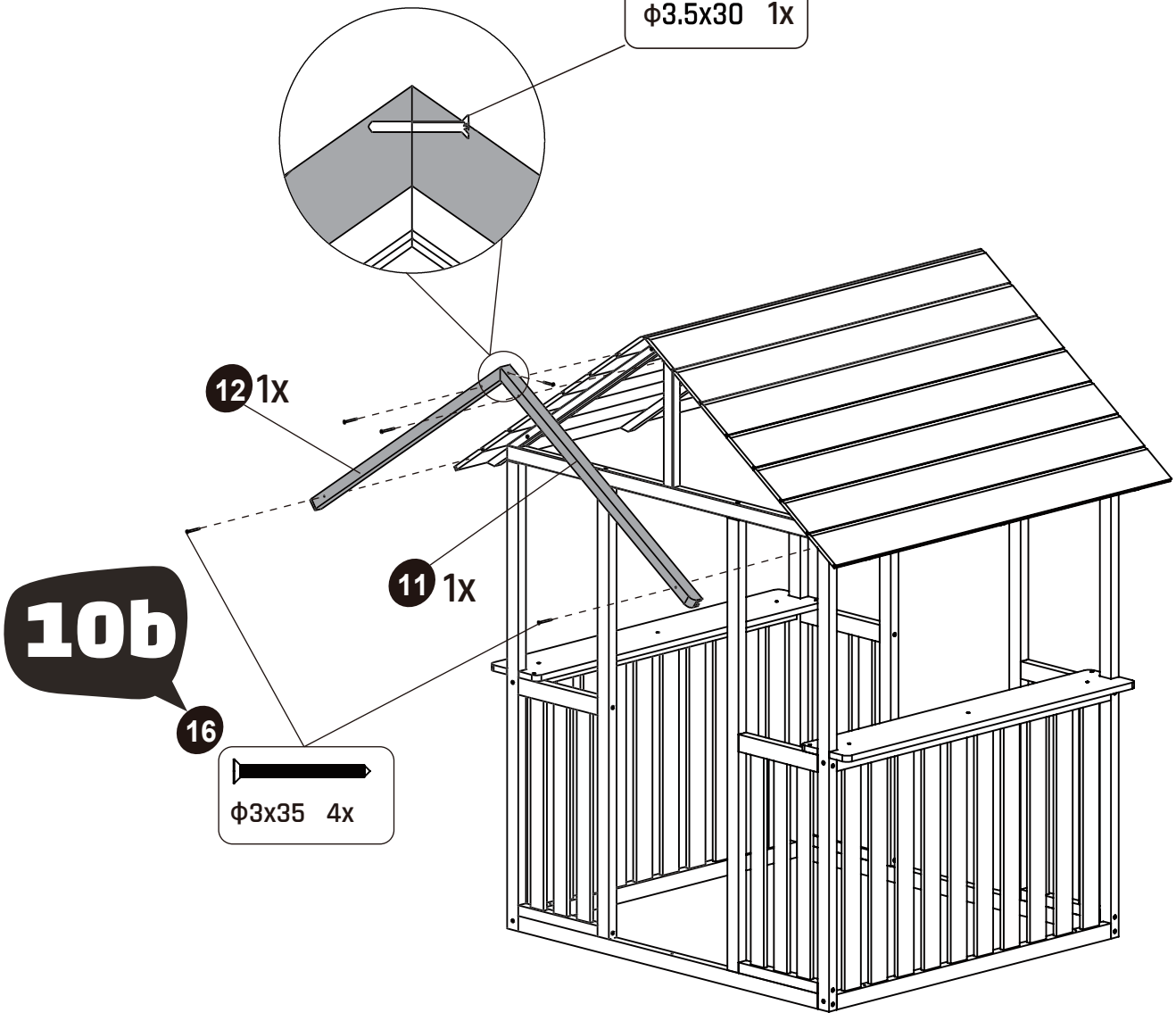

10b

16 ϕ3x35 4x

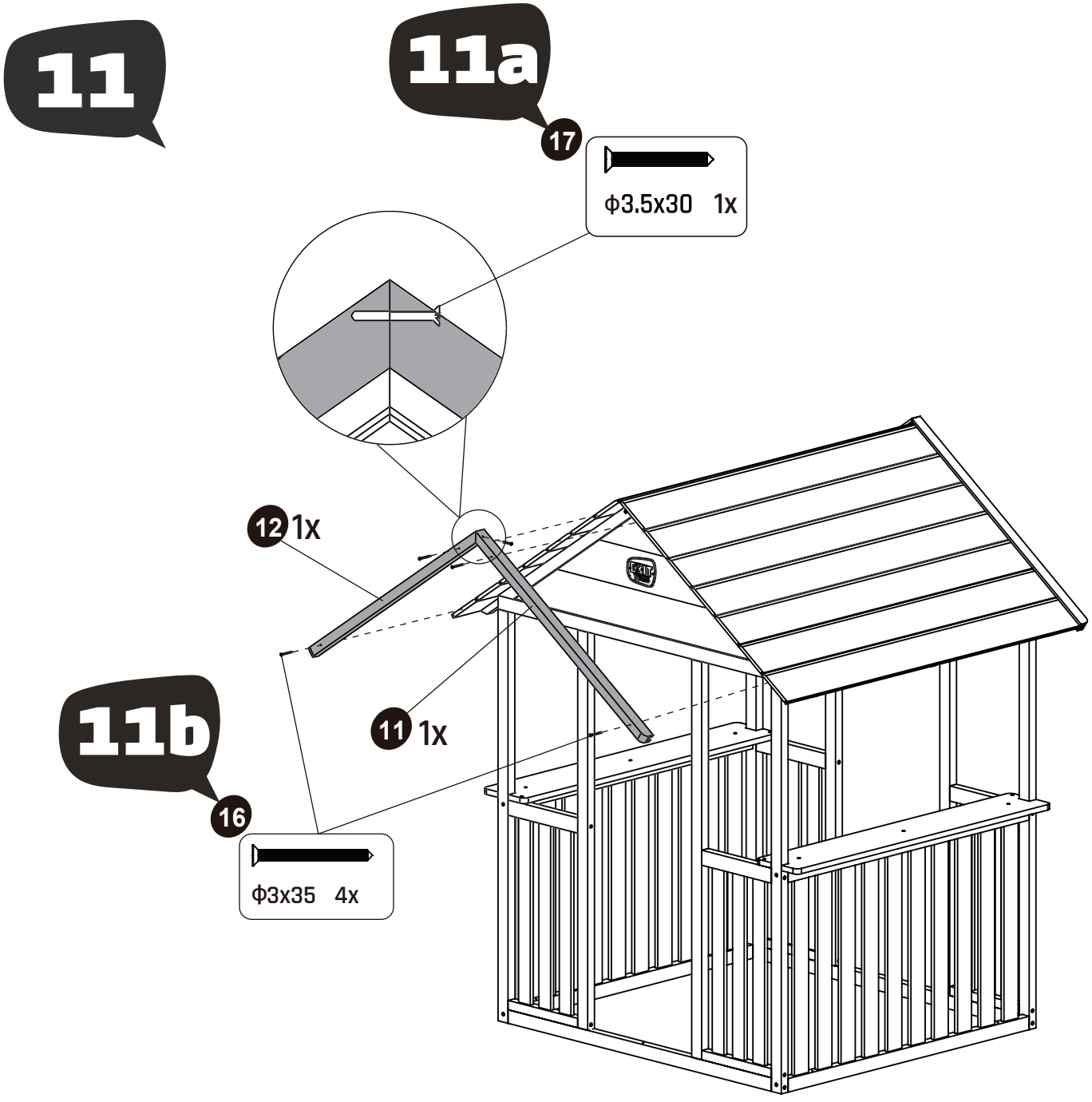
11
11a
17
ϕ3.5x30 1x
12 1x
11 1x
11b
16
ϕ3x35 4x

12

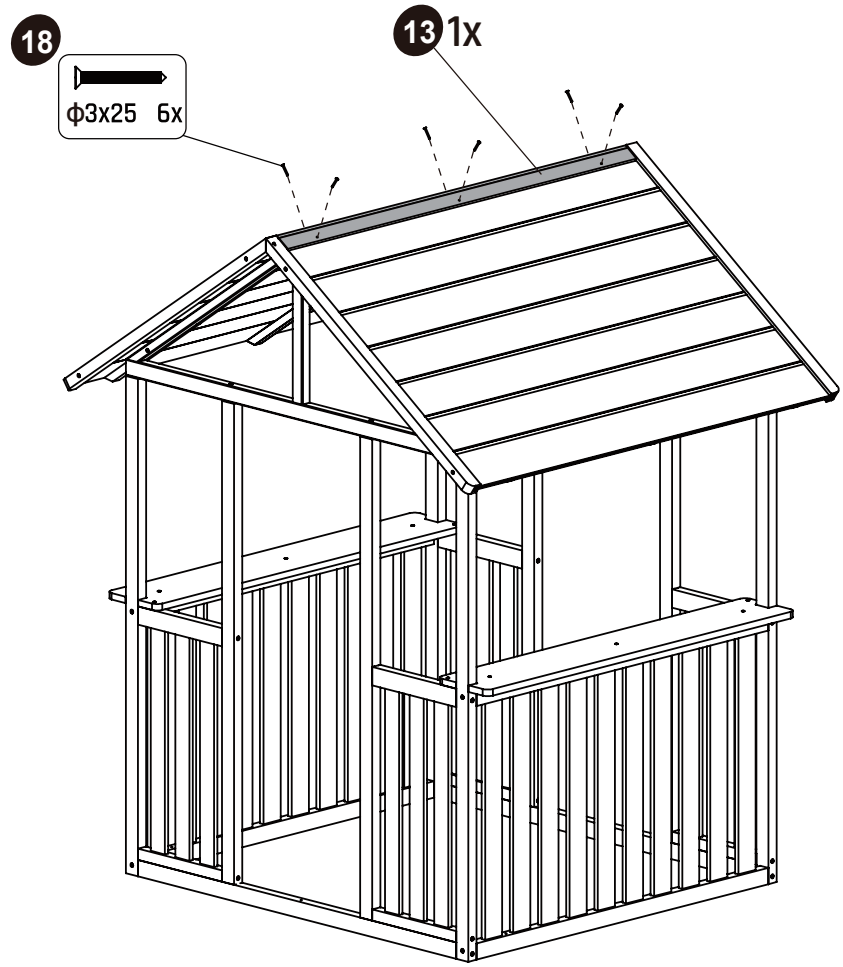

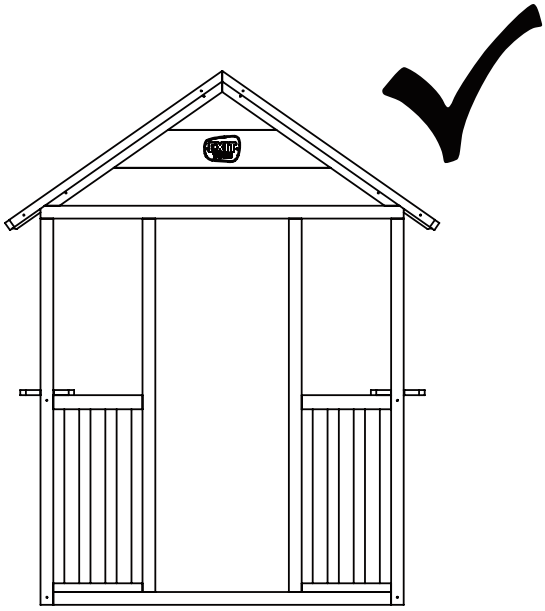

Panorama 100

Panorama 300

50.52.03.00

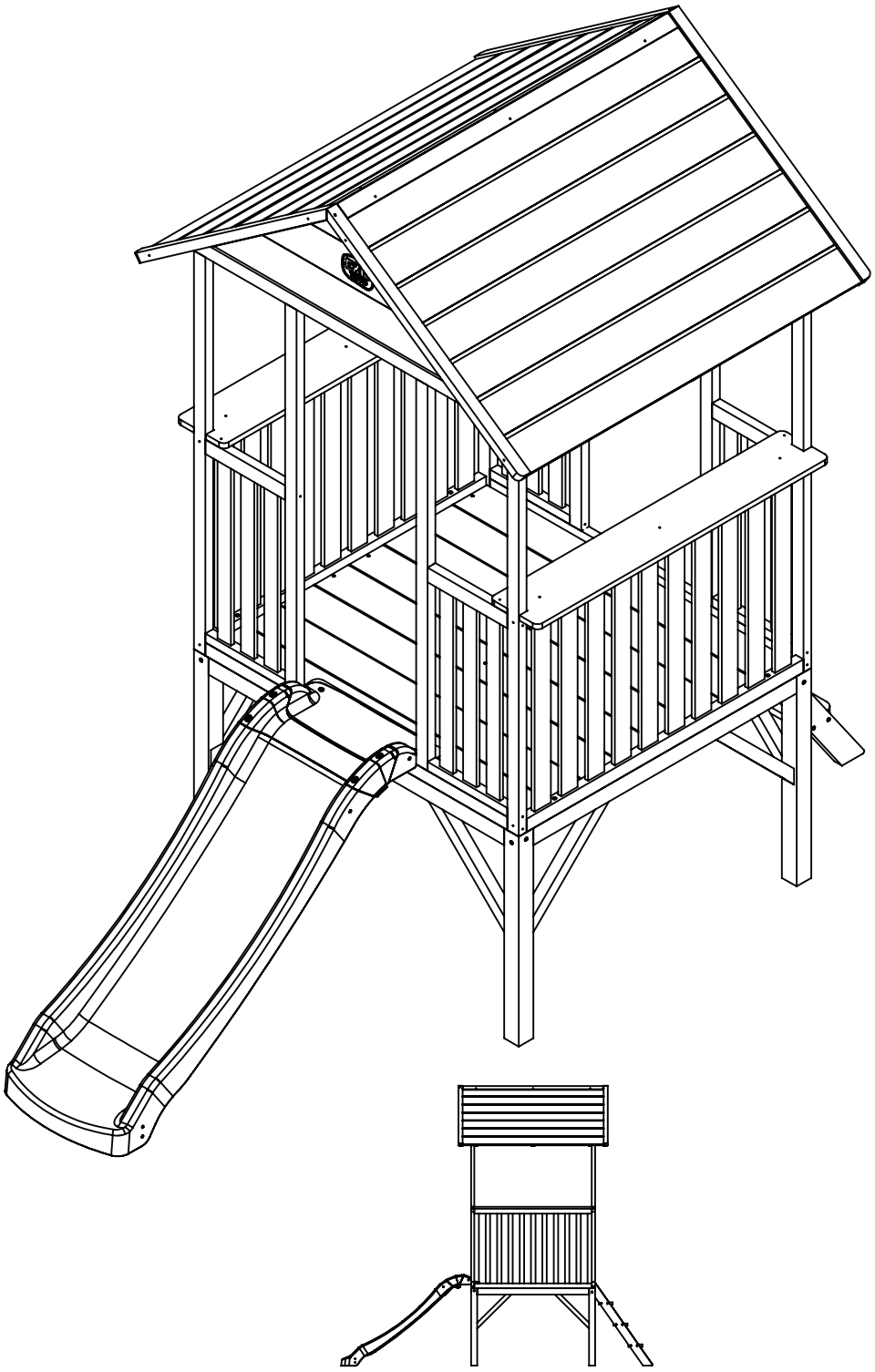

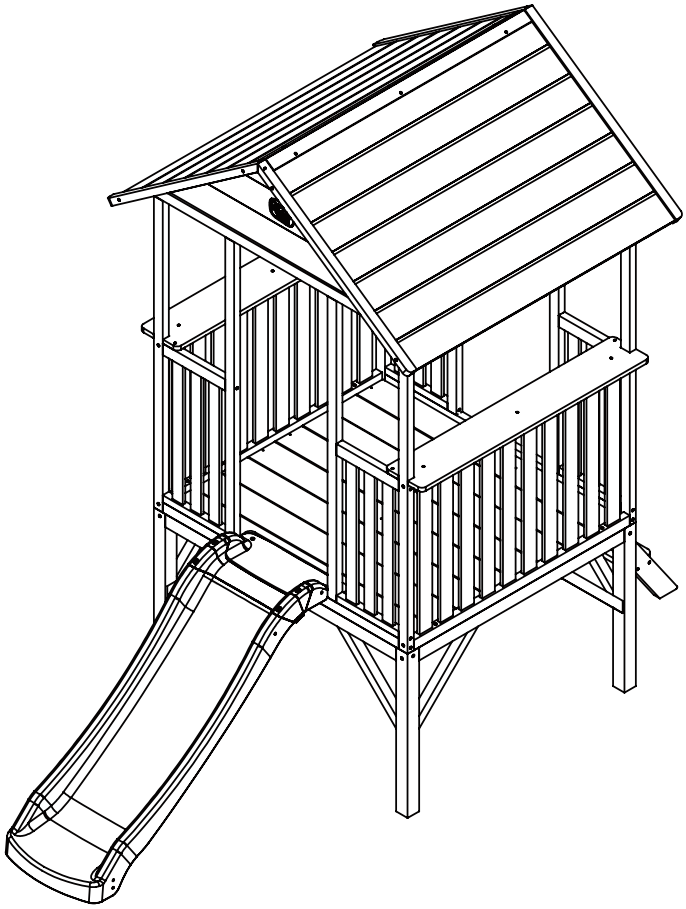

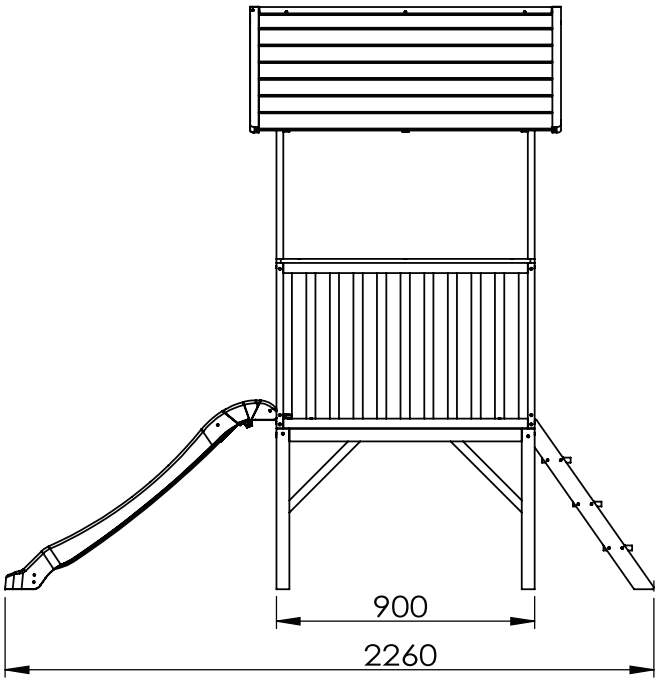
900
2260

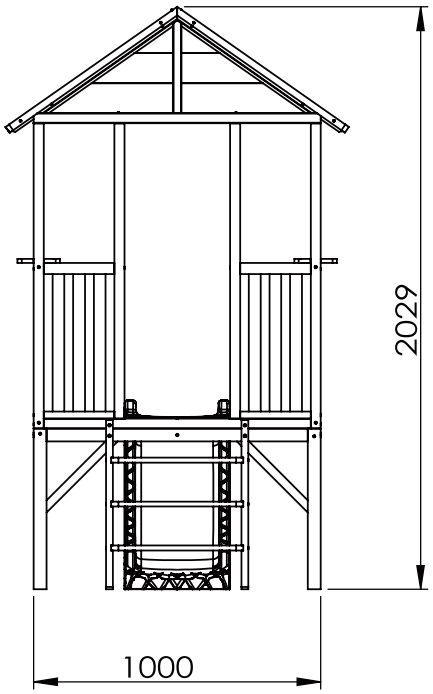
2029
1000

Platform 300

50.90.03.00

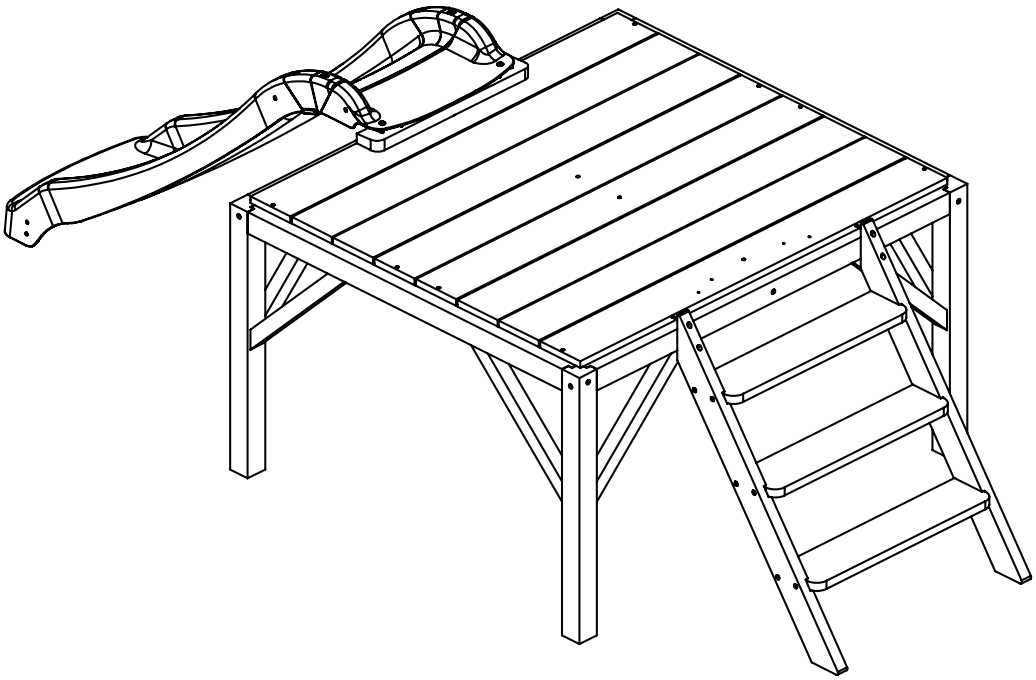

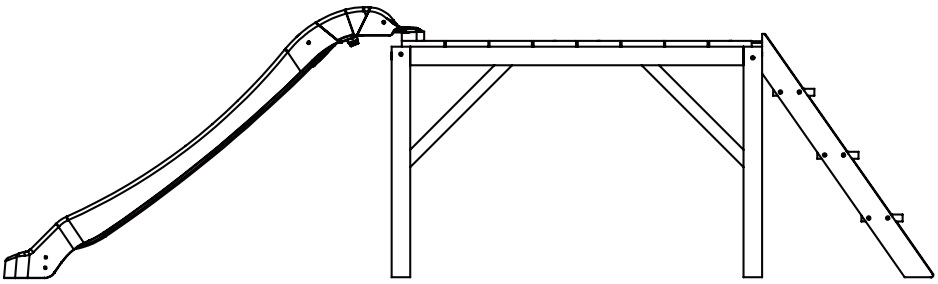

13kg

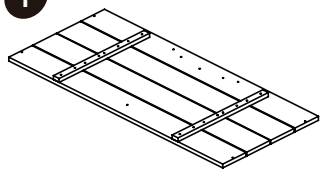

68.70.40.01 | 2x

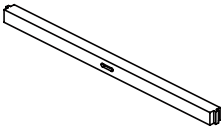

68.70.40.02 | 2x

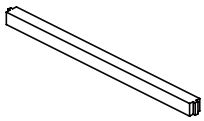

68.70.40.03 | 3x

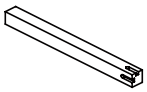

68.70.30.01 | 4x



68.70.40.04 | 8x

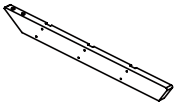

68.70.30.02 | 1x

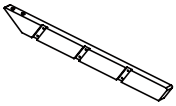

68.70.30.03 | 1x *

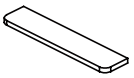

68.70.40.05 | 3x

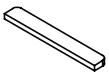

68.70.30.04 | 1x

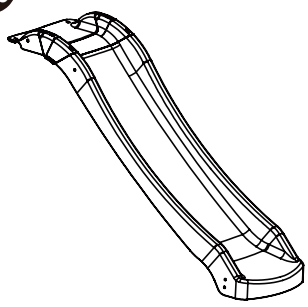

69.53.10.10 | 1x

68.70.30.80



ϕ4x70 12x



ϕ4x50 6x



ϕ3.5x40 12x



ϕ3x35 30x



ϕ3.5x30 4x



ϕ4.5x25 2x

50.90.03.00

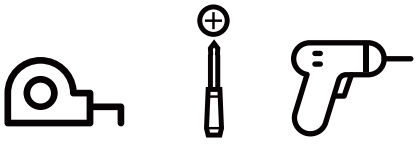

* BOX REFERENCE: XX.XX.

PRODUCTION ID: XXX XXX

1

x2

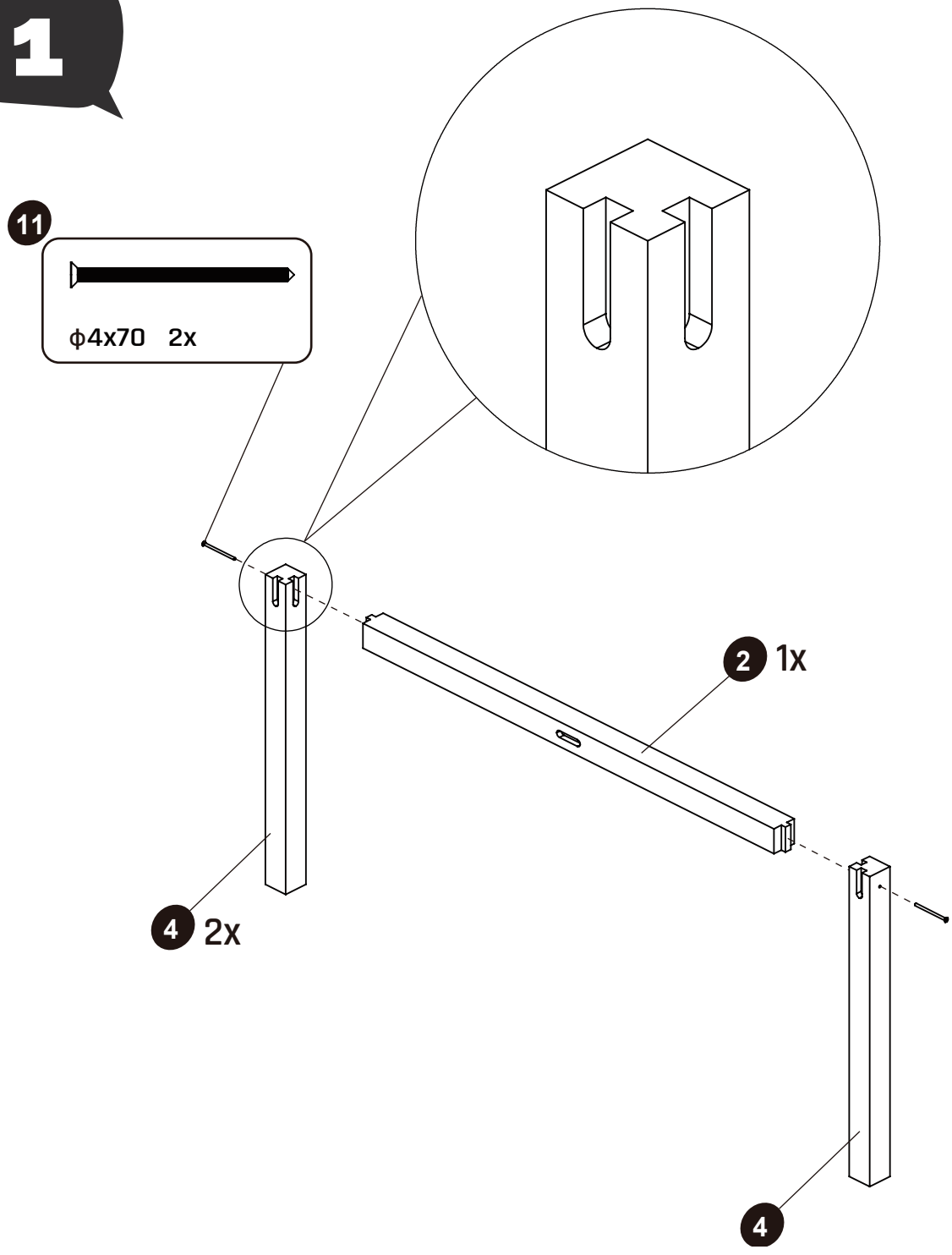

2

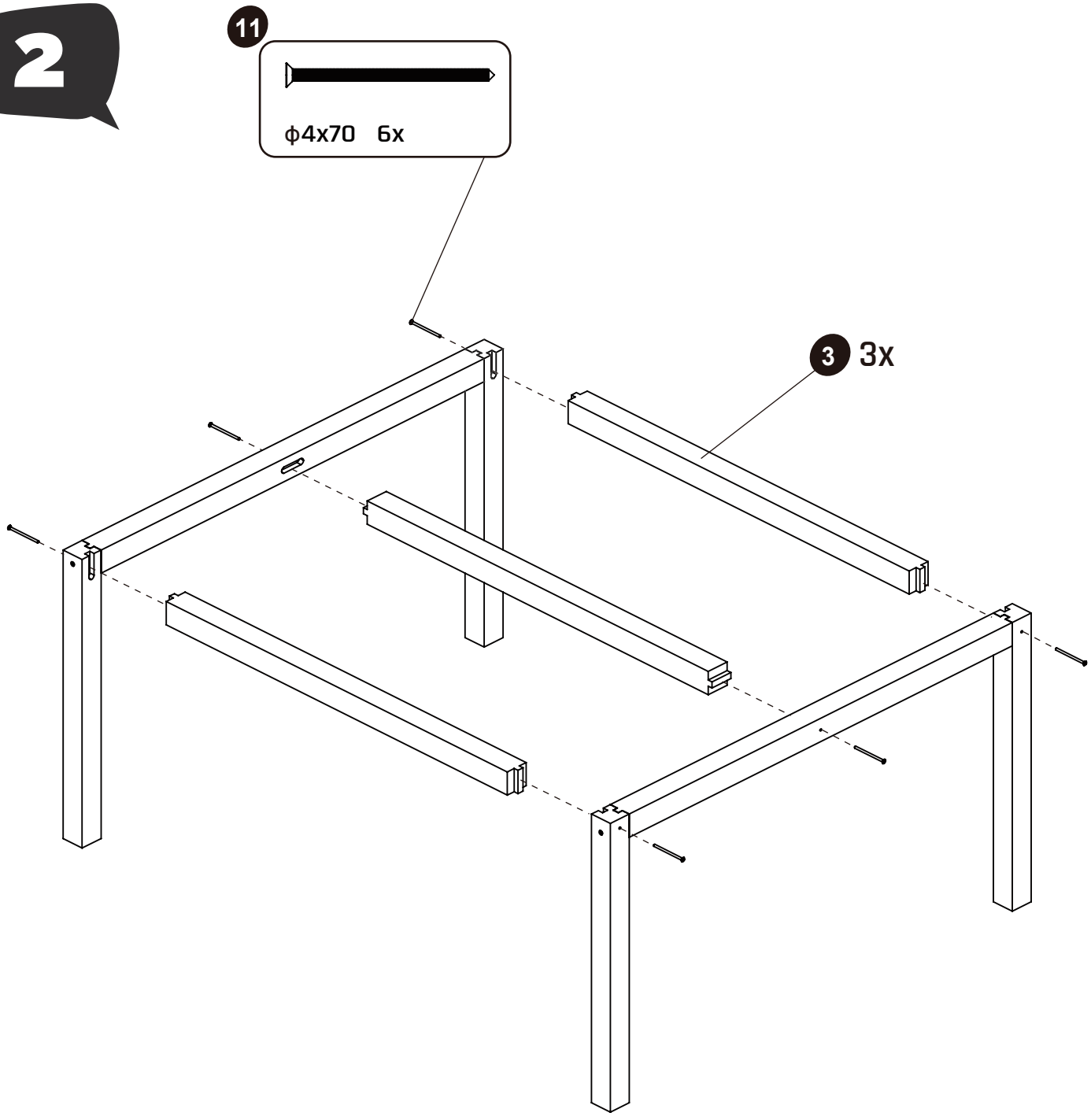

3

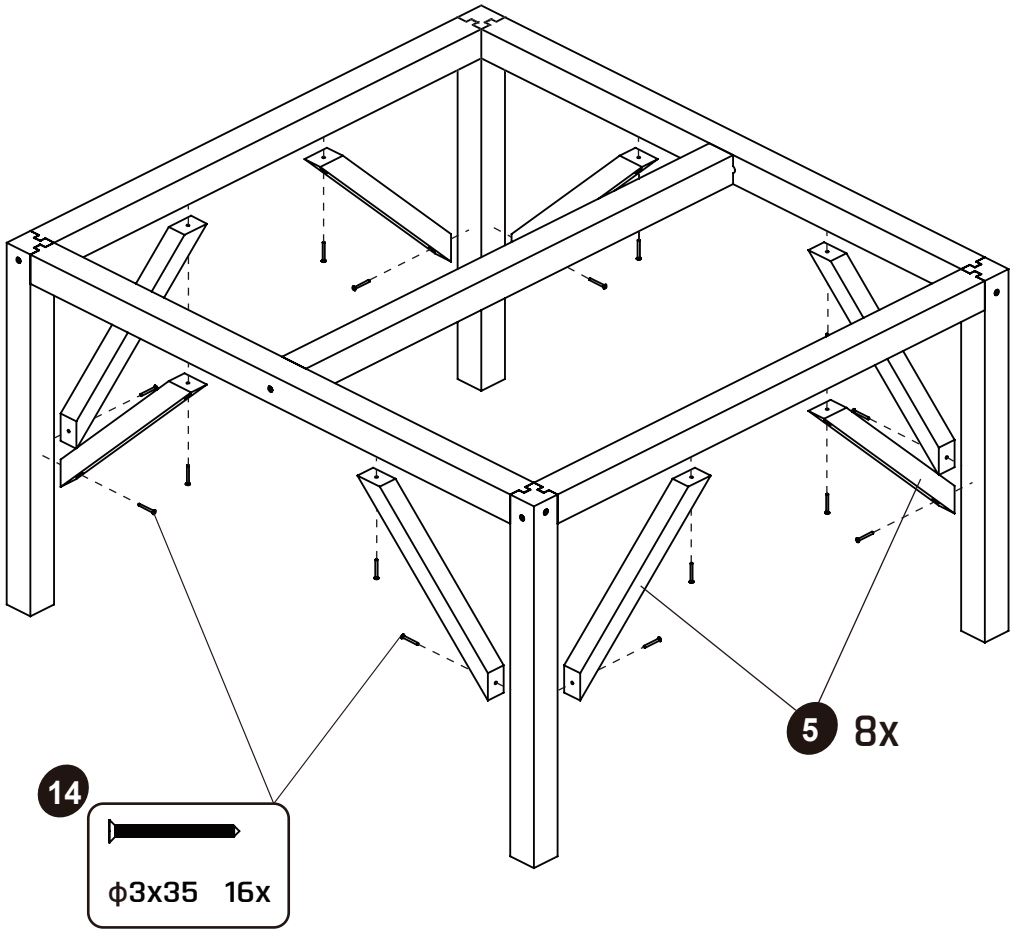

4

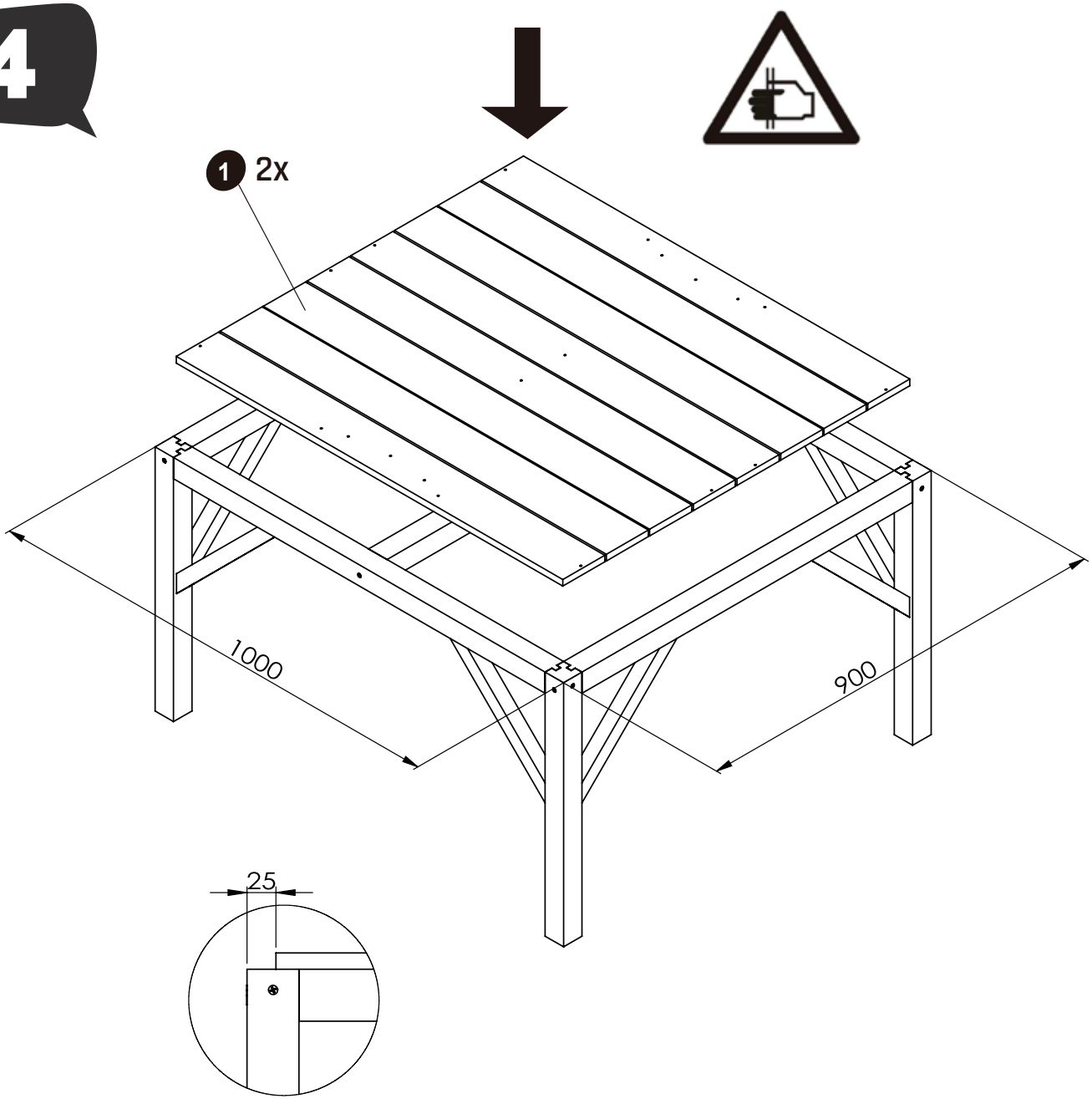

5

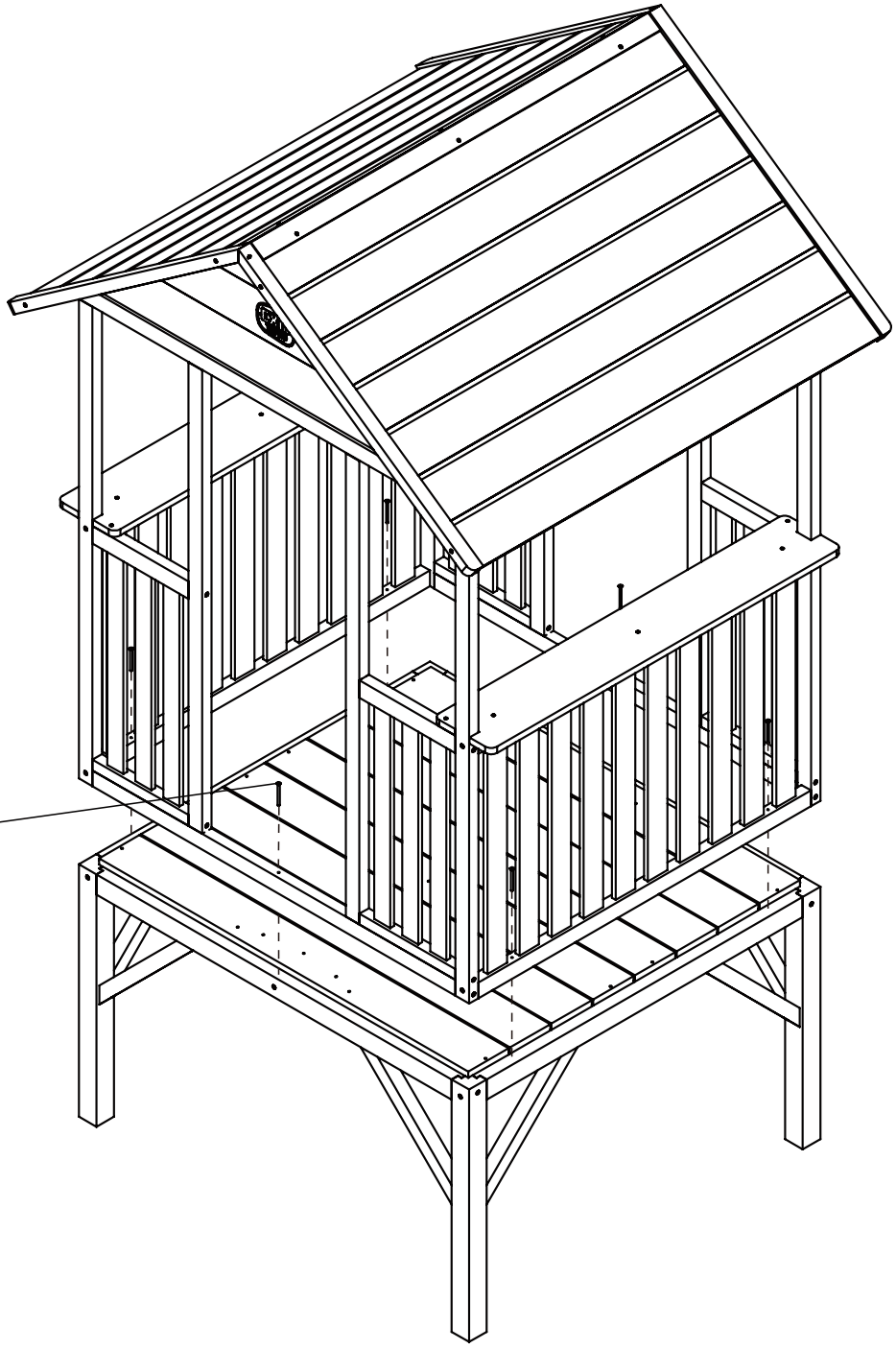

12

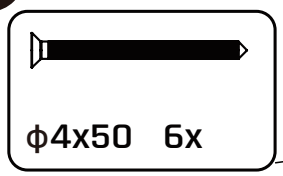

ϕ4x50 6x

6

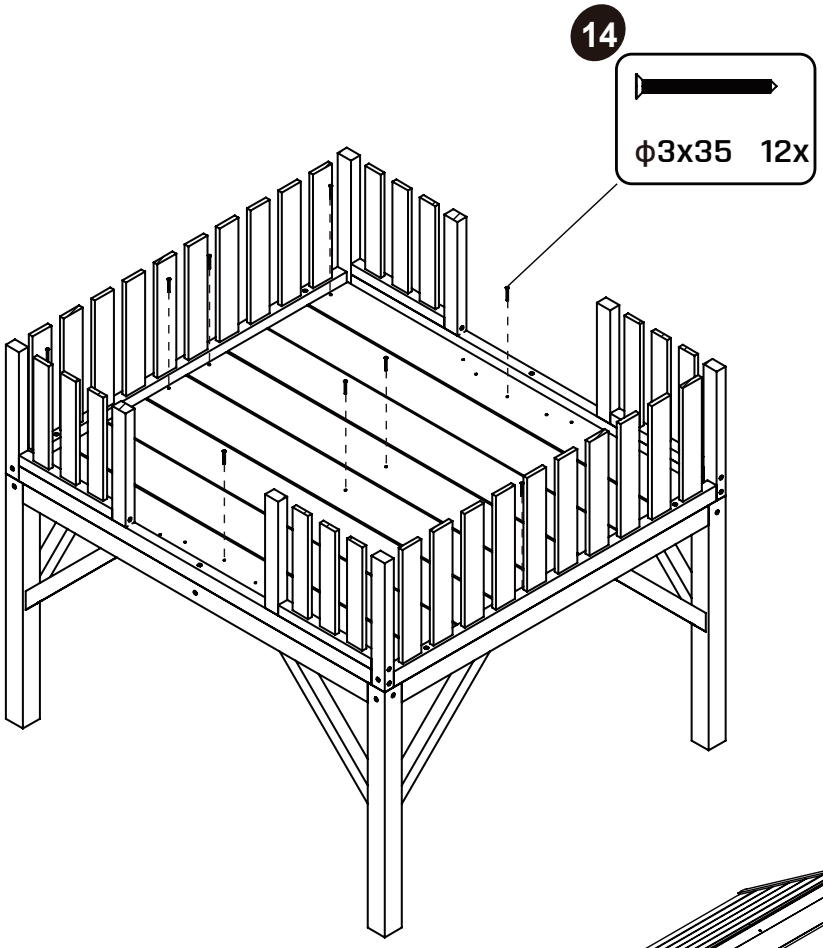

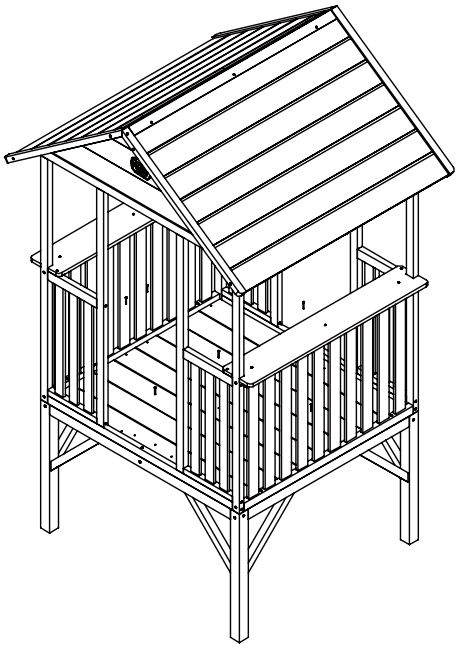

7

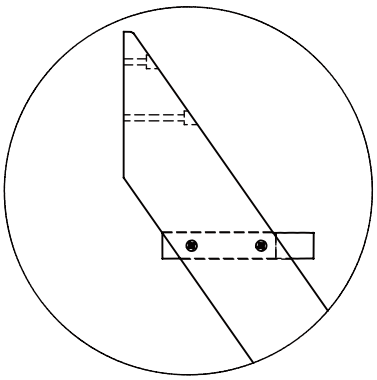

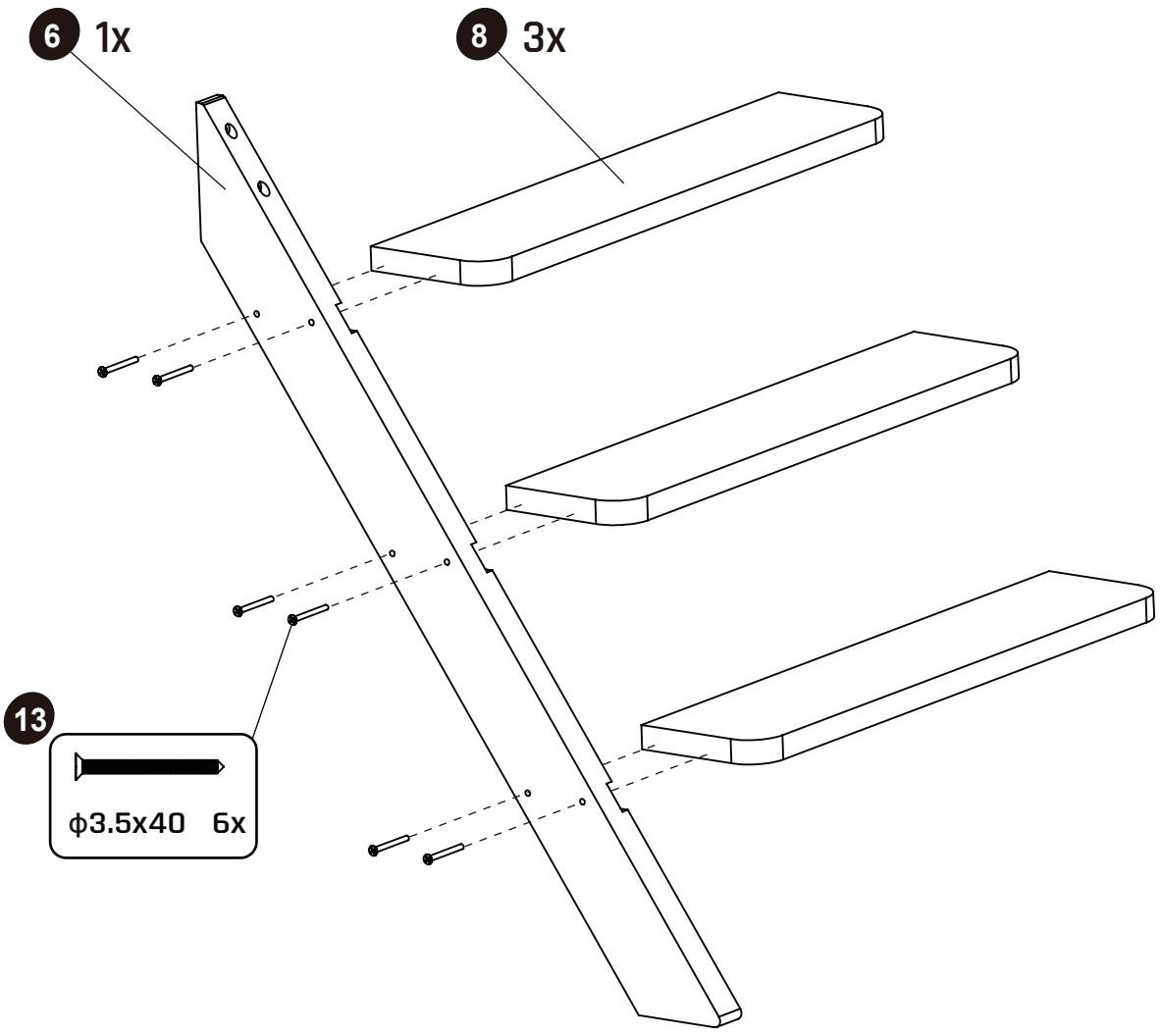

8

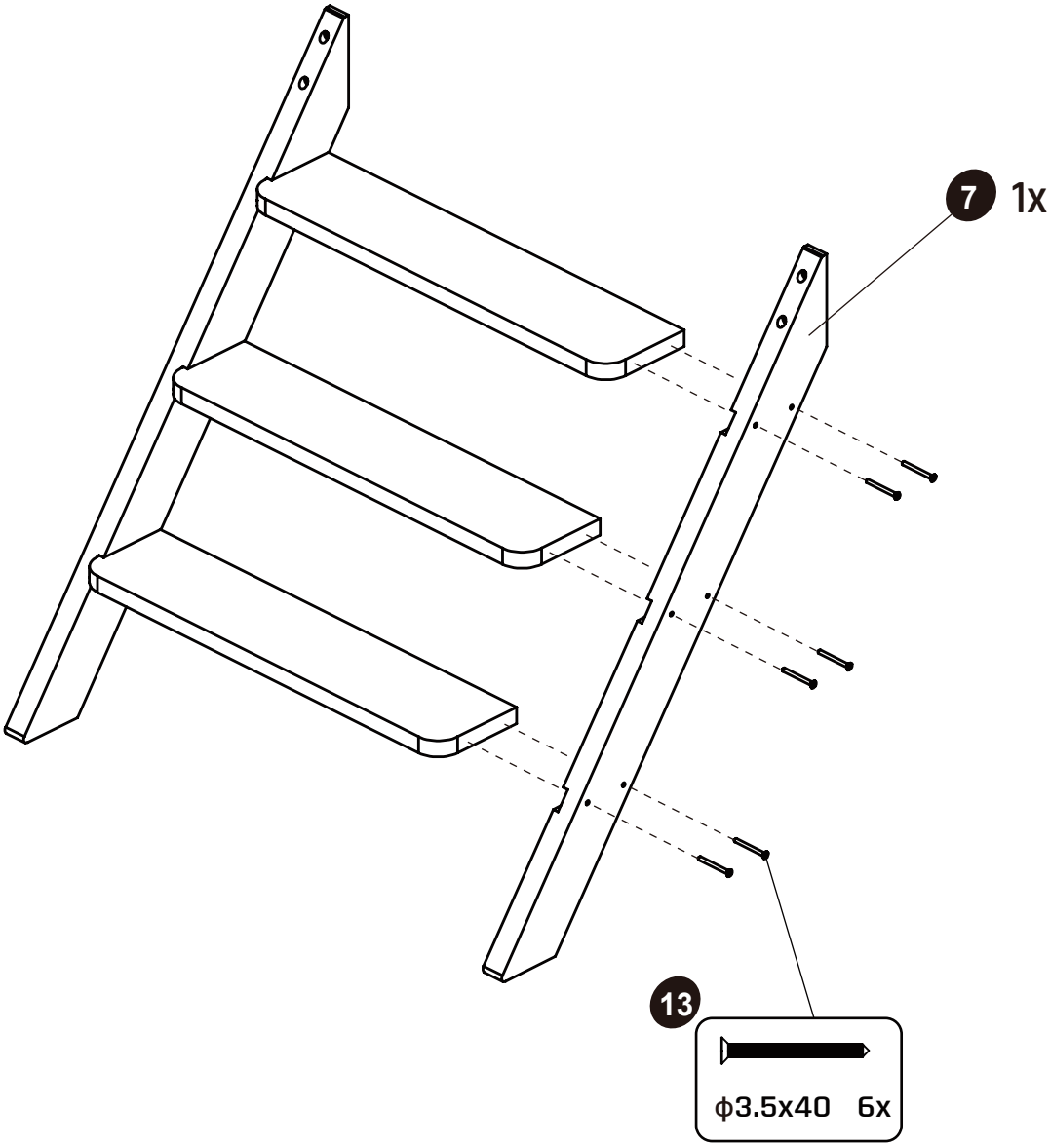

9

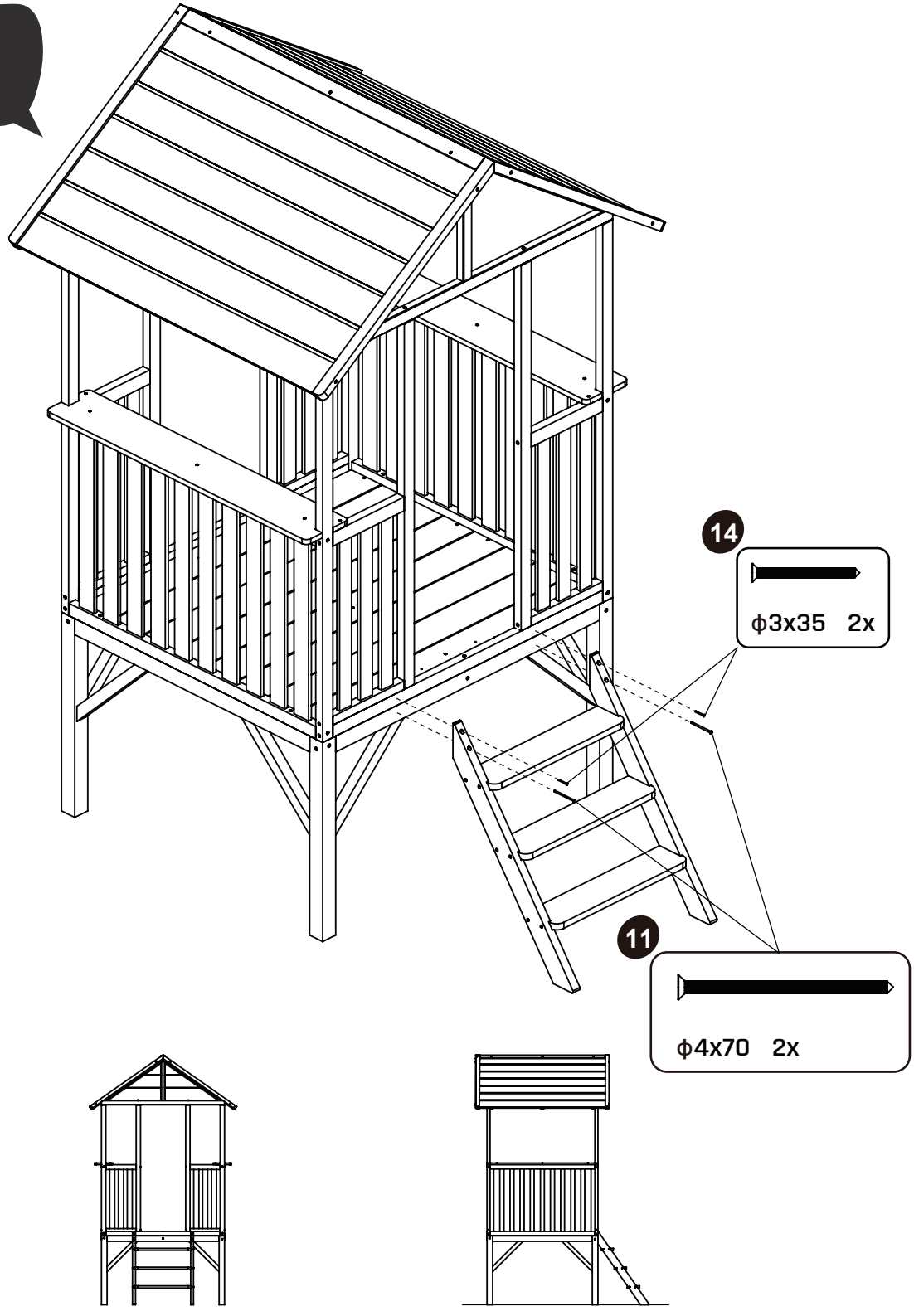

10

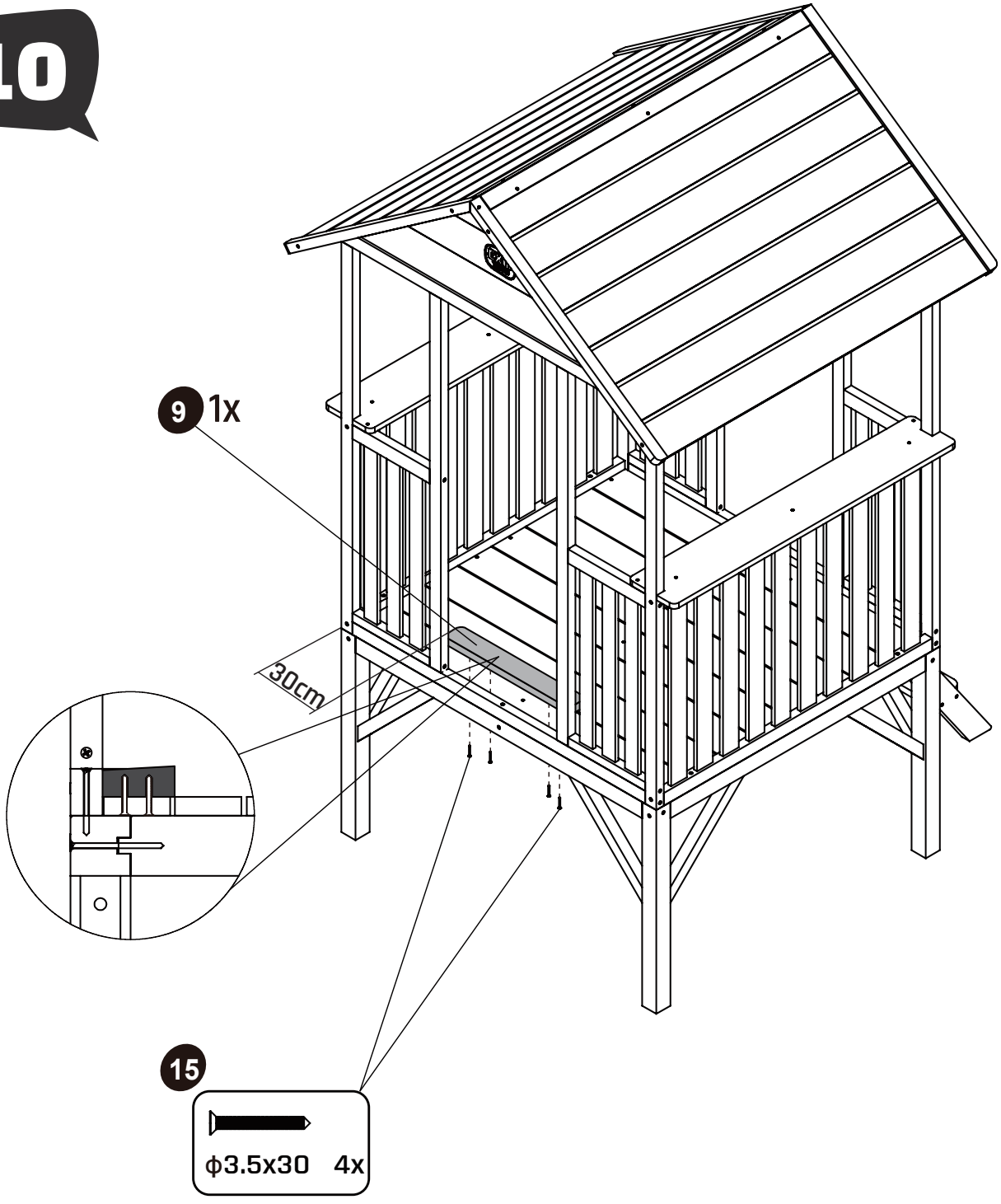

11

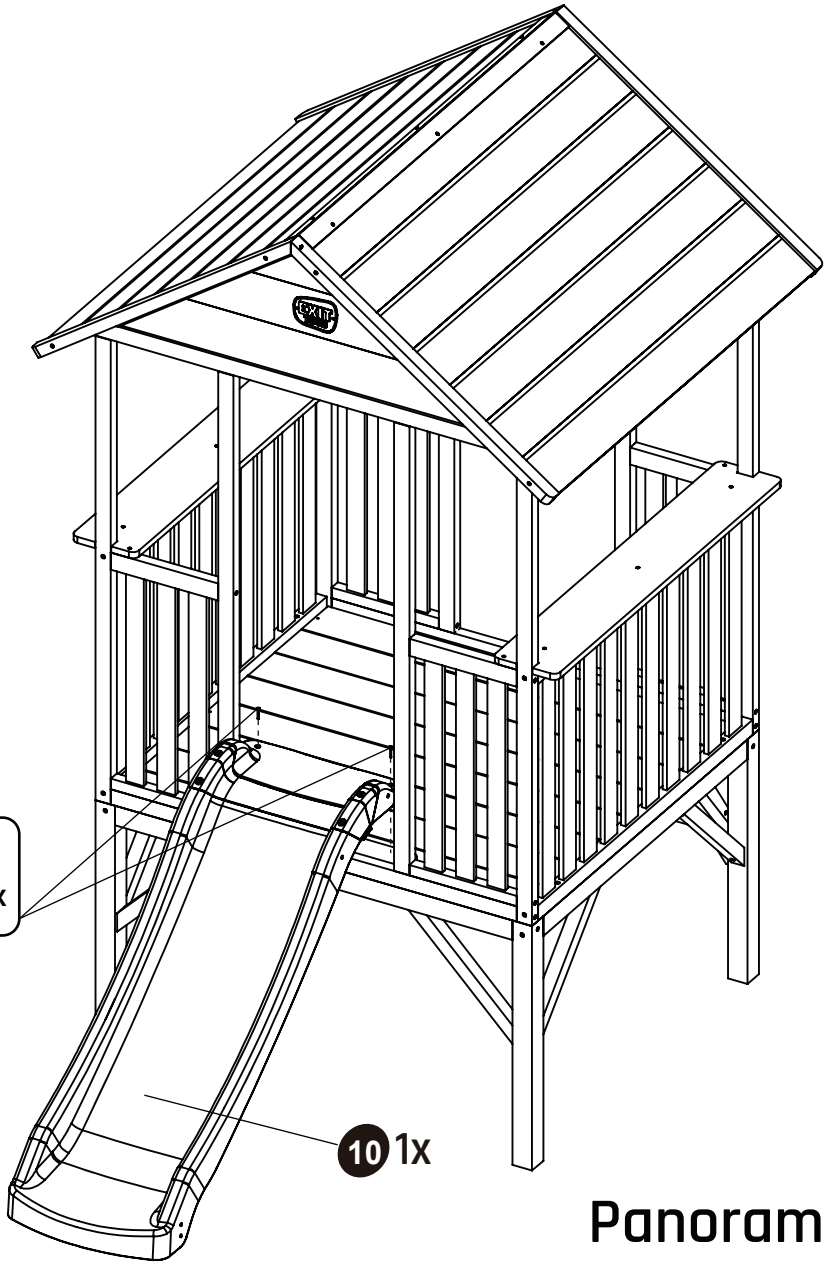

Panorama 300

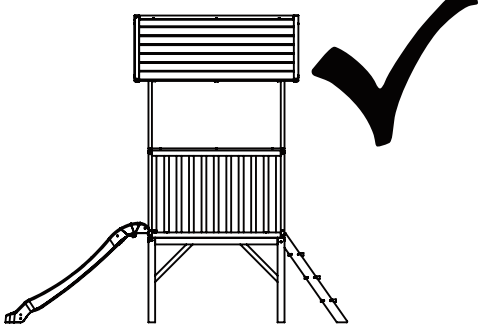

Panorama 500

50.52.05.00

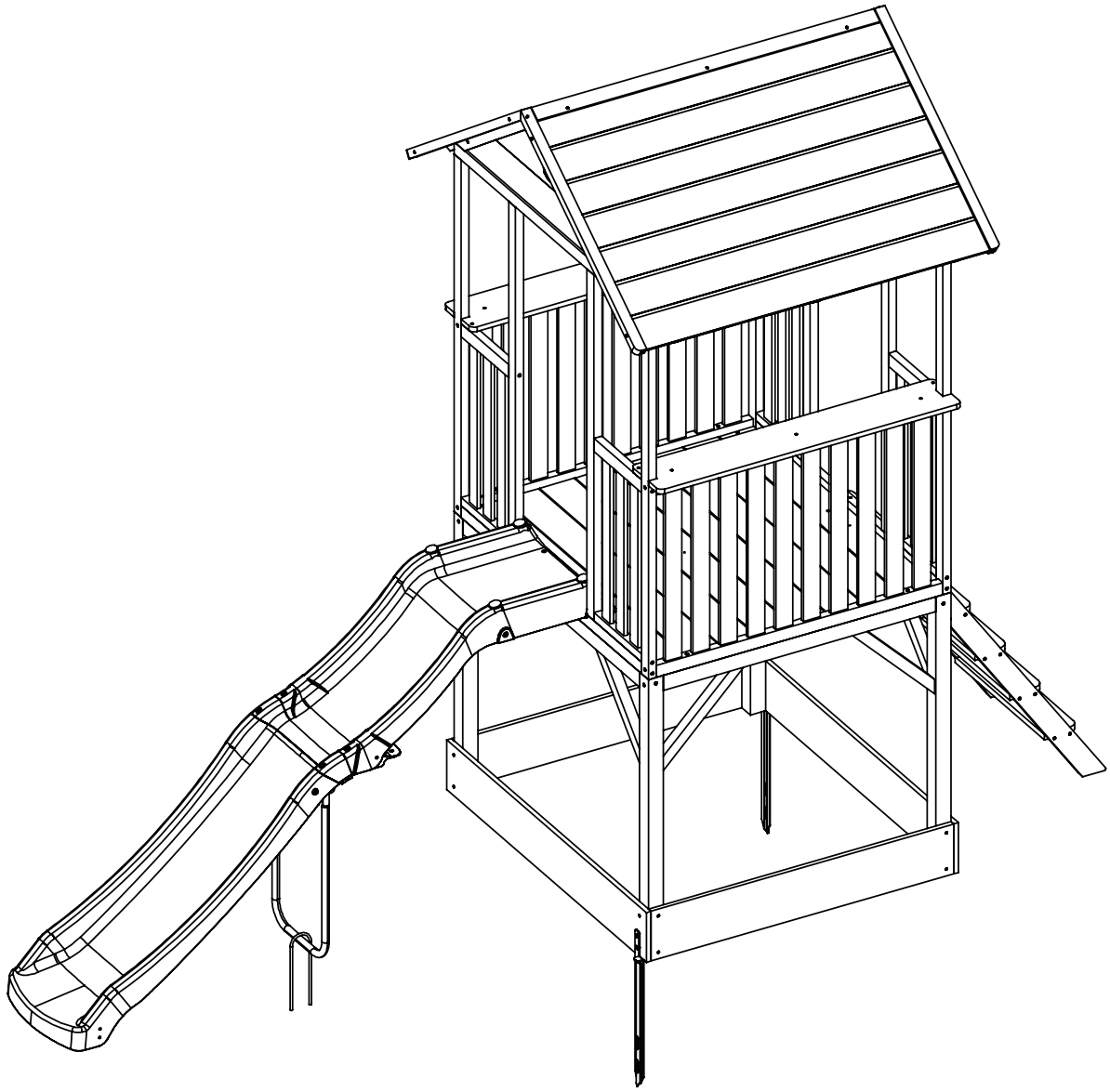

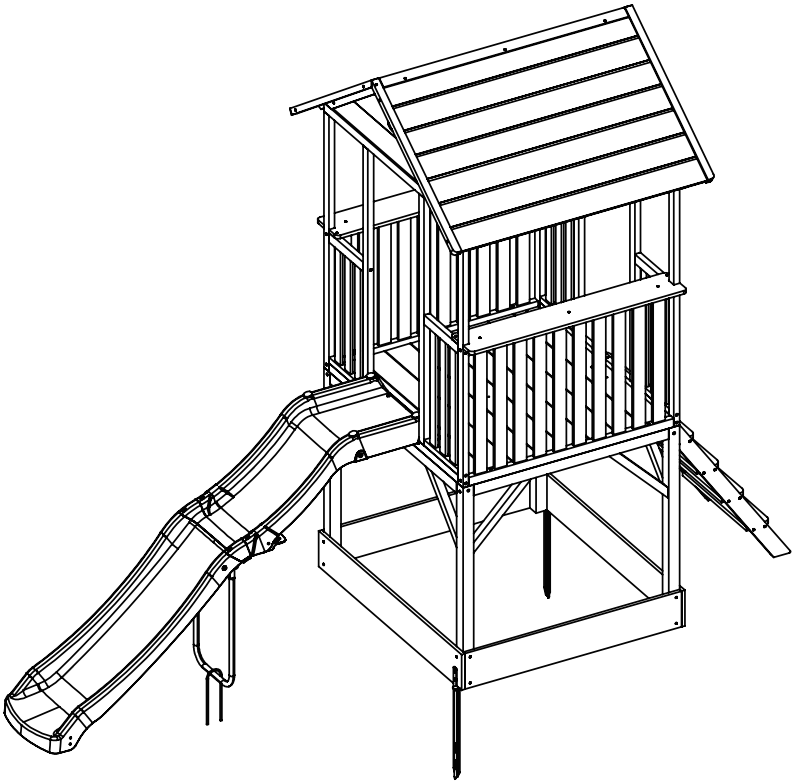

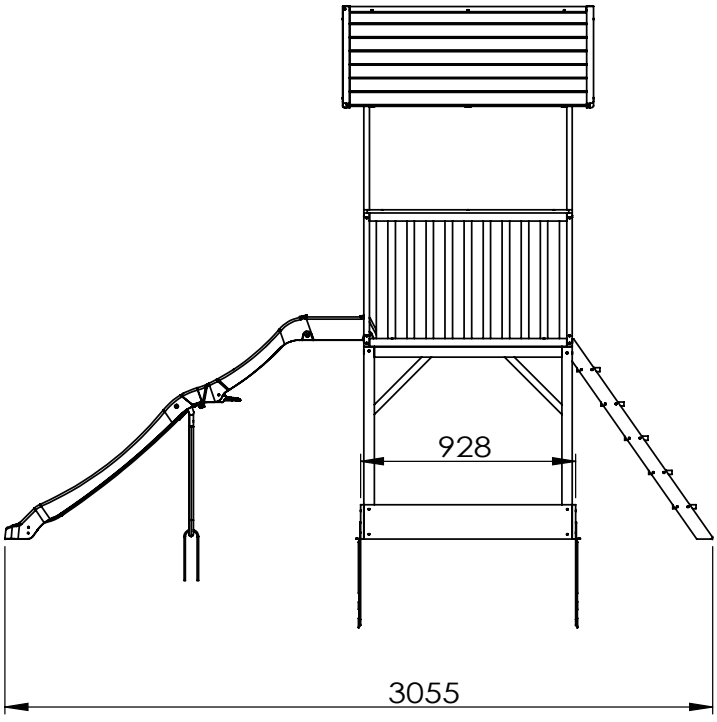
928
3055

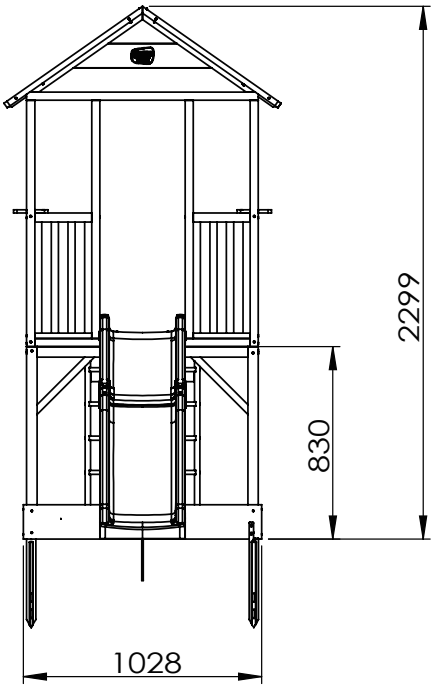
2299
830
1028

Platform 500

50.90.05.00

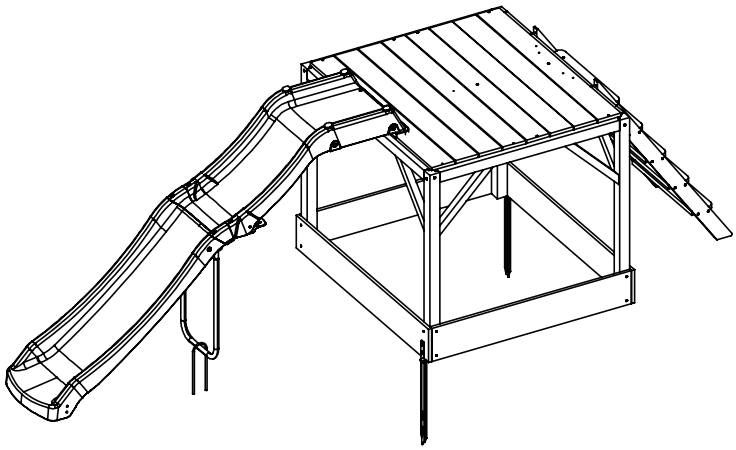

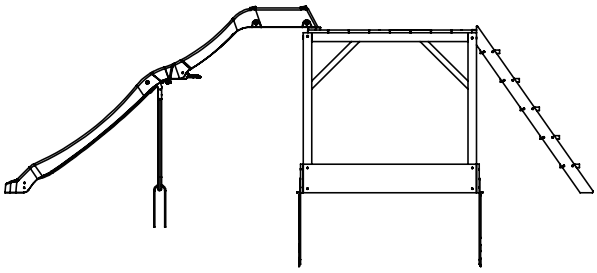

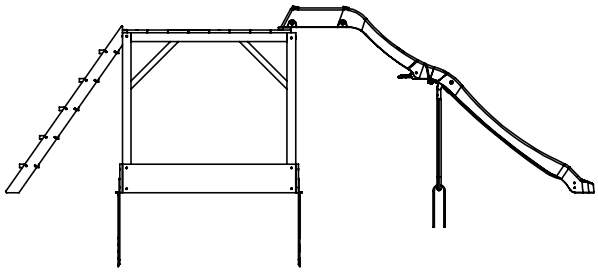

22.5kg

1

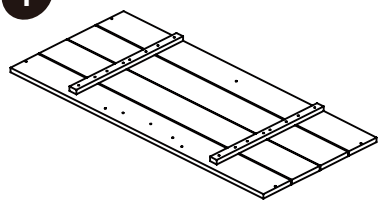

68.70.40.01	2x

2

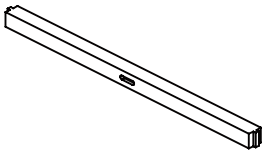

68.70.40.02	2x

3

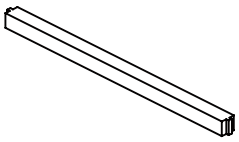

68.70.40.03	3x

4

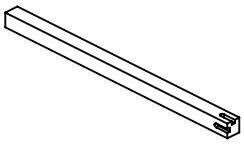

68.70.50.01	4x

5

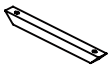

68.70.40.04	8x

6

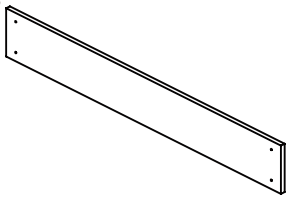

68.70.50.02	2x

7

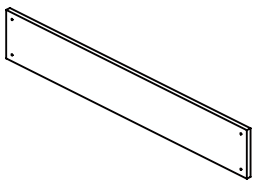

68.70.50.03	2x

8

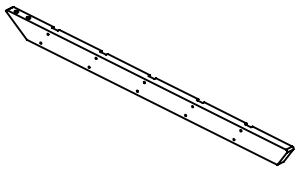

68.70.50.04	1x

9

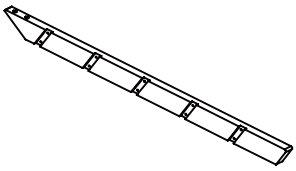

68.70.50.05	1x

*

10

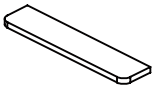

68.70.40.05	4x

11

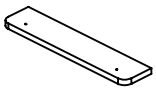

68.70.50.06	1x

12

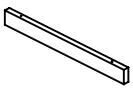

68.70.50.07	1x

13



68.70.50.08	1x

19

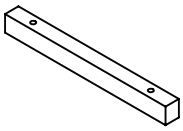

68.70.50.09	1x

50.90.05.00

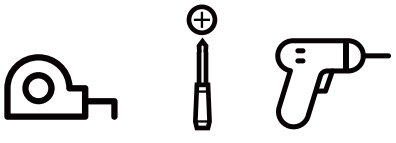

*

BOX REFERENCE:	XX.XX.XXX
PRODUCTION ID:	XXXXXXXX

68.70.50.80



ϕ4x70 12x



ϕ4x50 6x



ϕ3.5x40 24x



ϕ3x35 44x



ϕ3.5x30 4x

50.90.05.00

S1

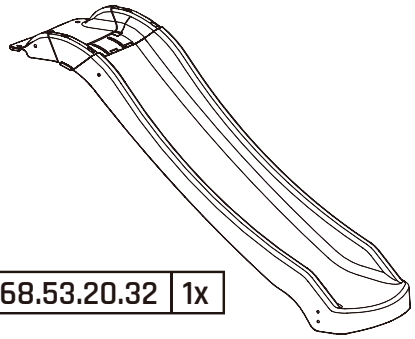

68.53.20.32 | 1x

S2

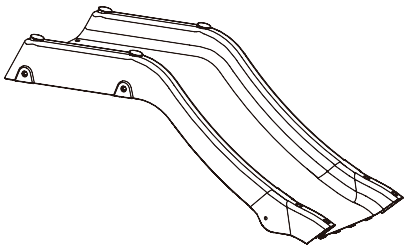

68.53.20.31 | 1x

S3

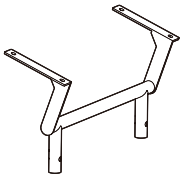

68.53.20.33 | 1x

S4

306mm

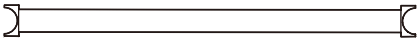

68.53.20.35 | 2x

S5

300mm



68.53.20.36 | 2x

S6

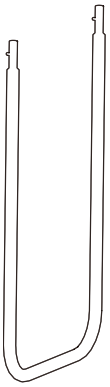

68.53.20.34 | 1x

S7



68.53.20.37 | 1x

S8

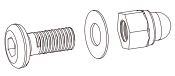

M6x15 9x

S9

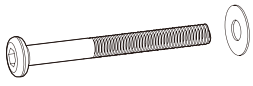

M6x58 4x

S10

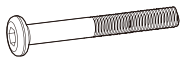

M6x50 2x

S11

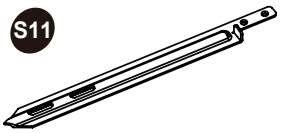

52.99.01.00 2x

S12



M4.5x40 4x

52.99.02.00

T1



Tool | 1x

T2



Tool | 1x

T3



Tool | 1x

68.70.50.85

50.90.05.00

1

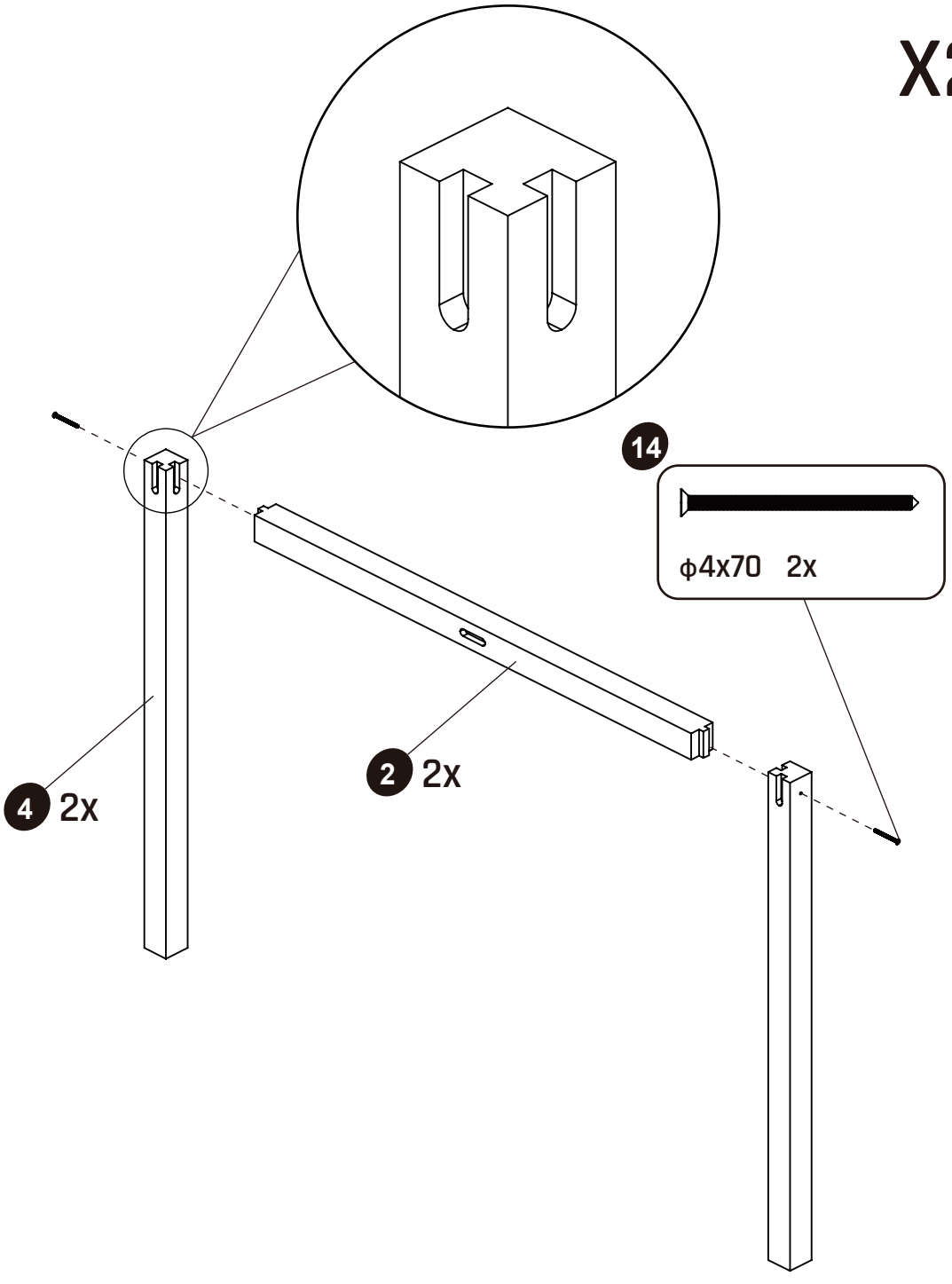

2

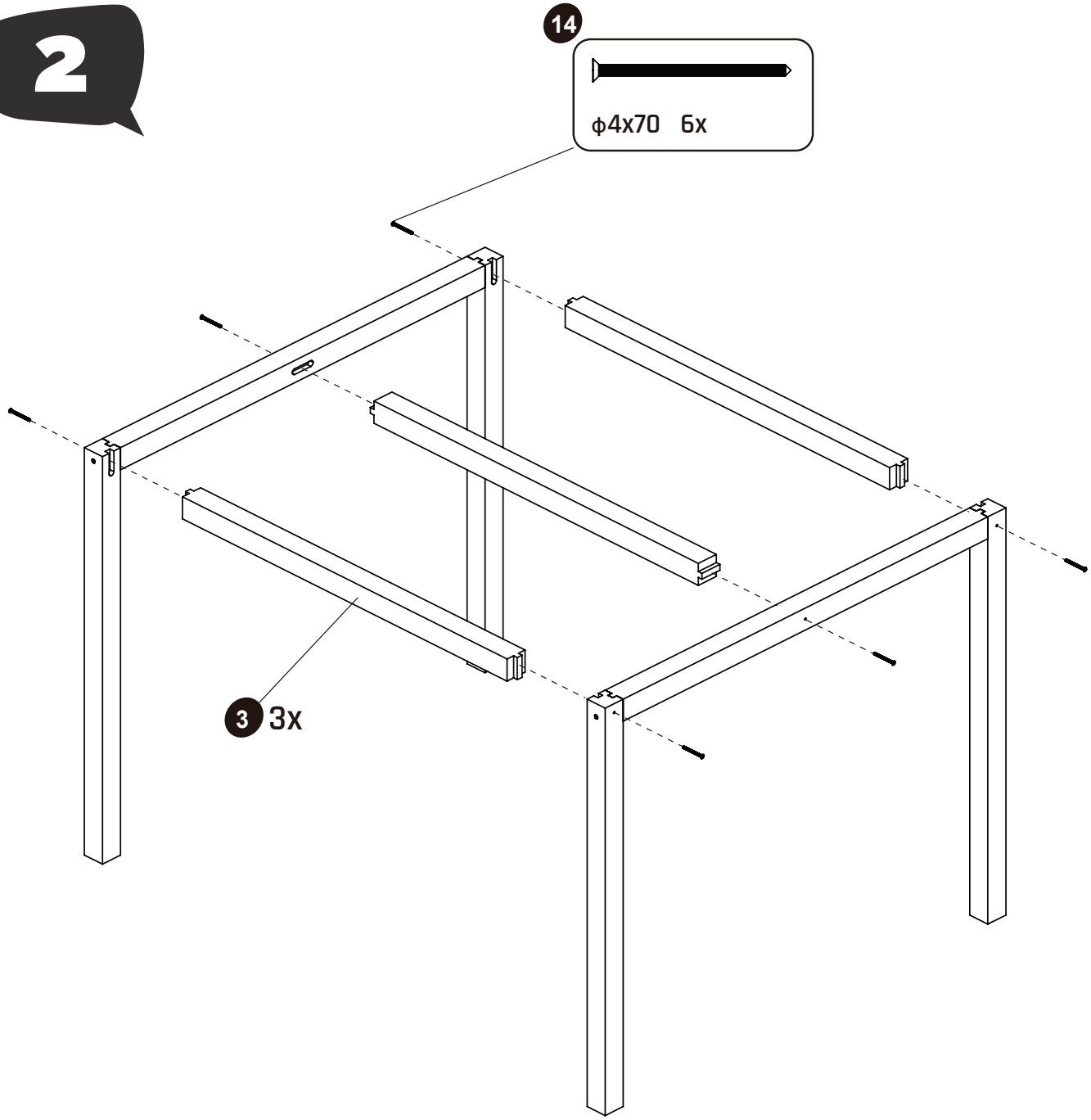

3

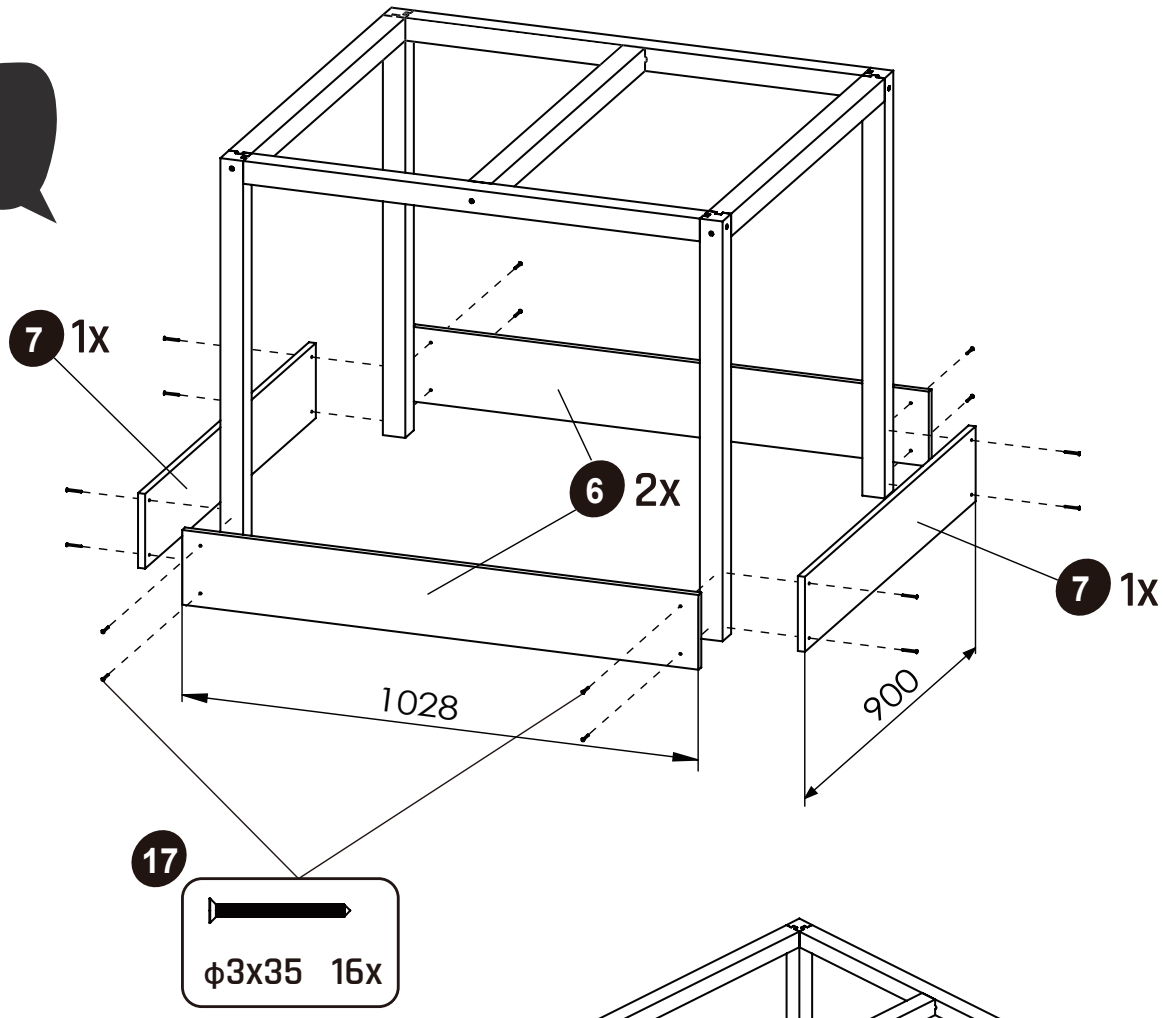

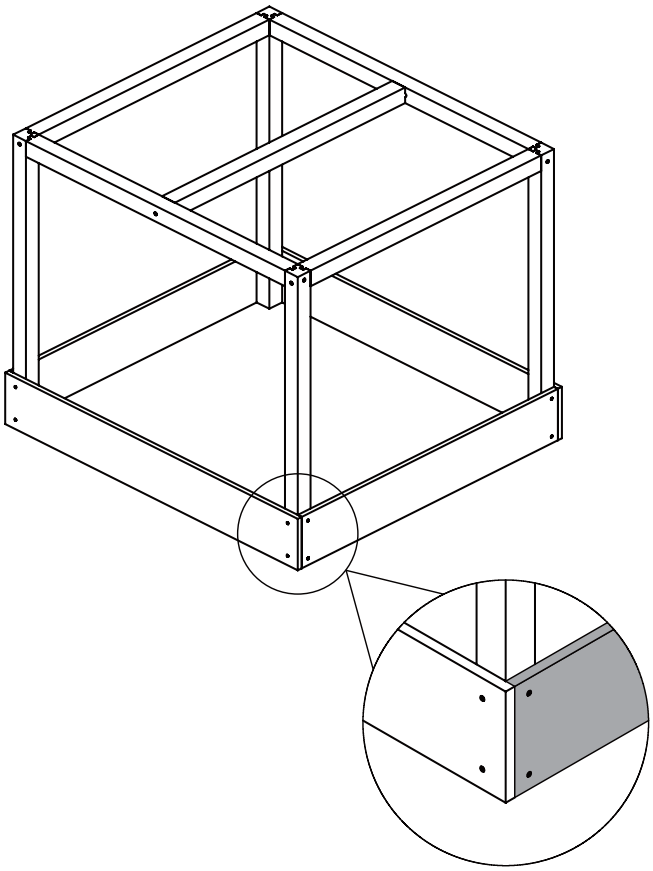

4

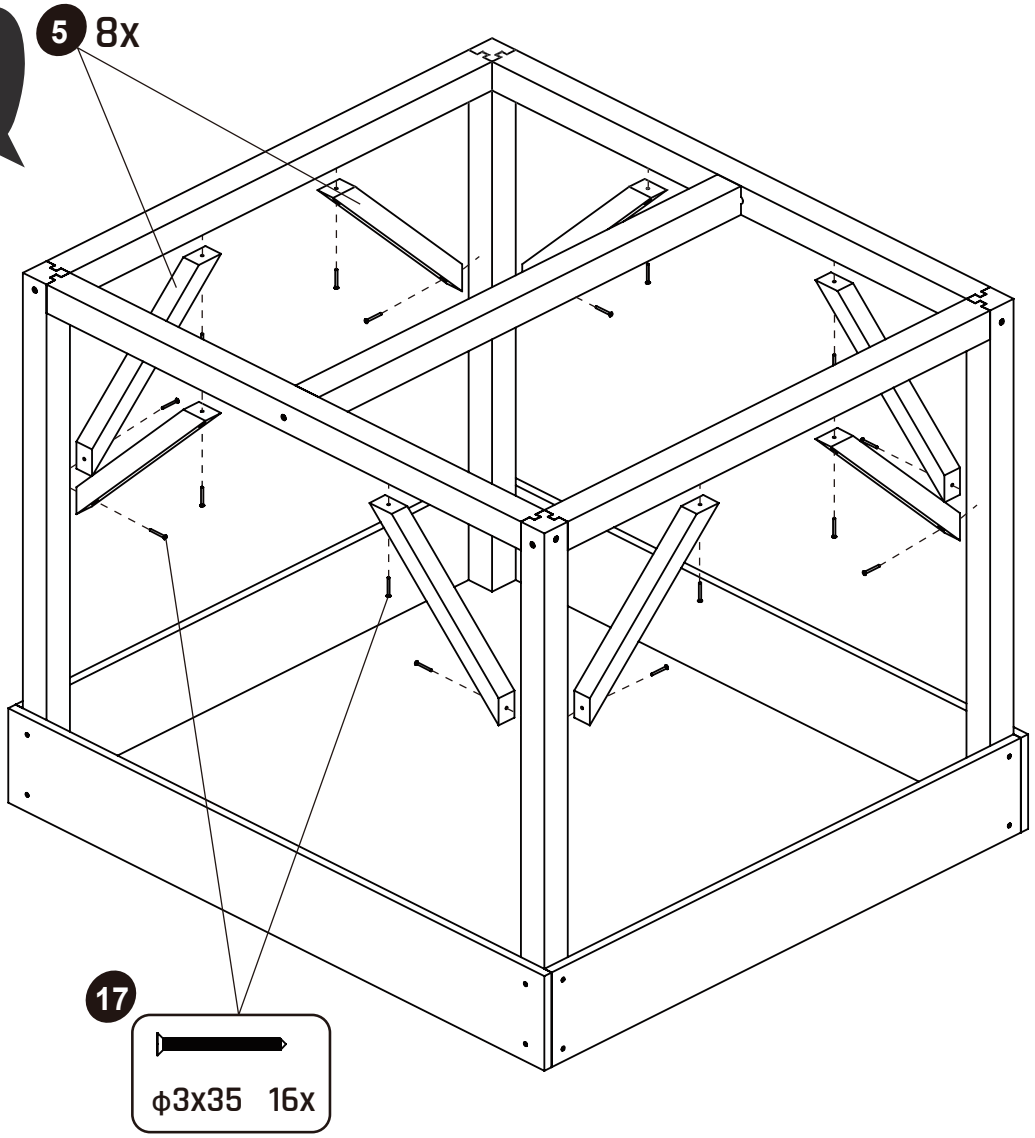

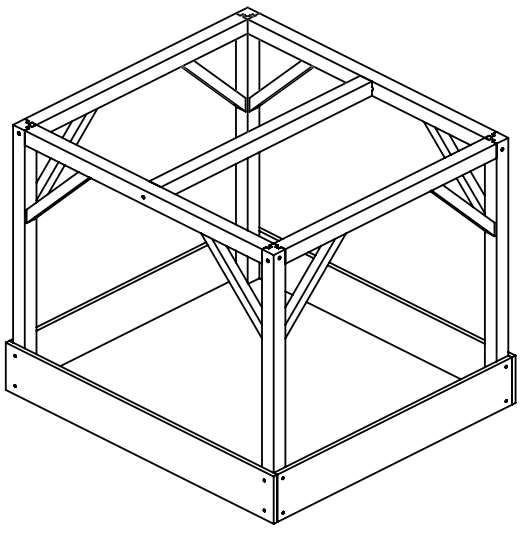

5

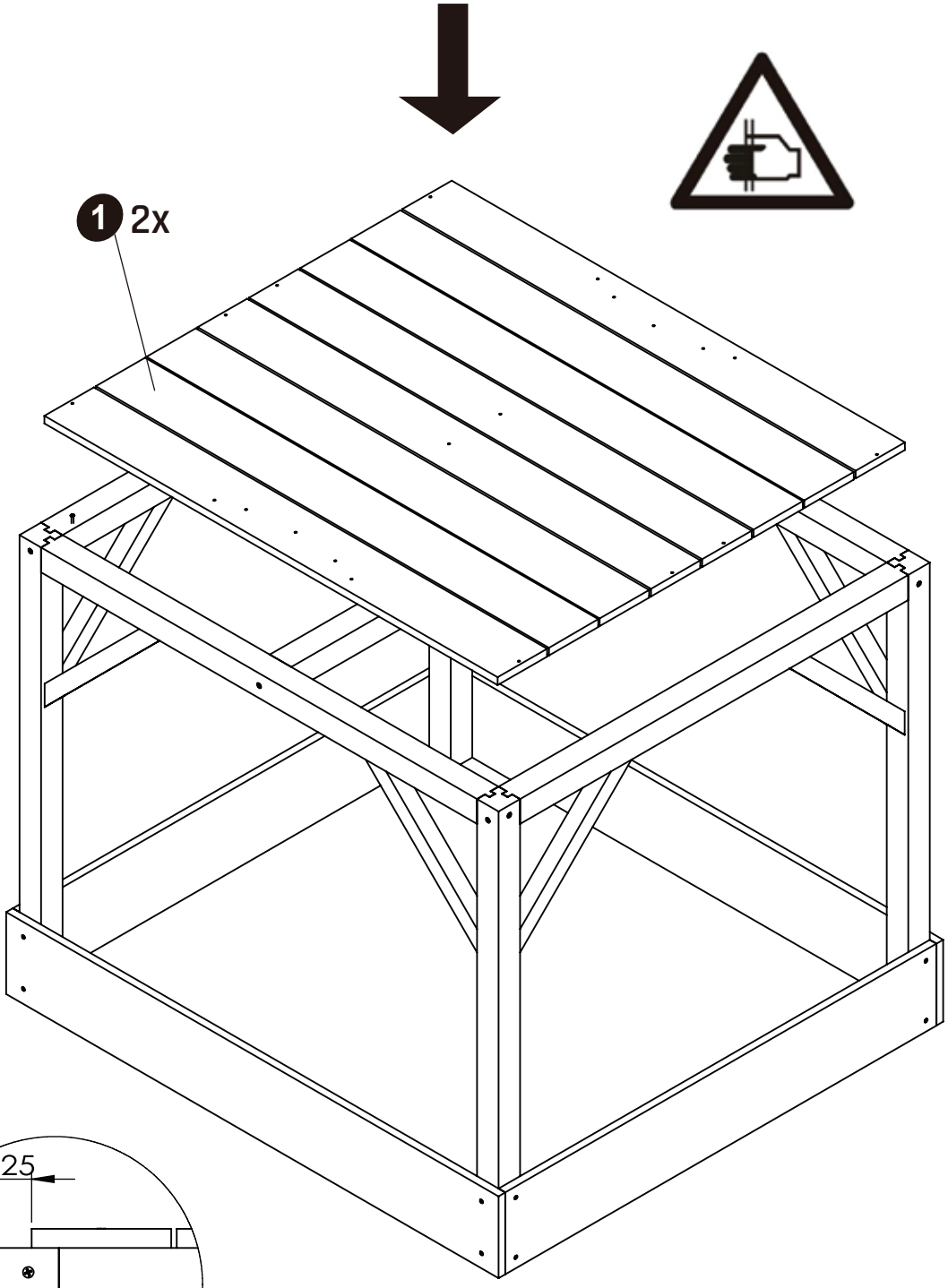

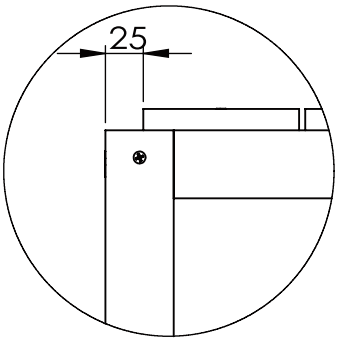

6

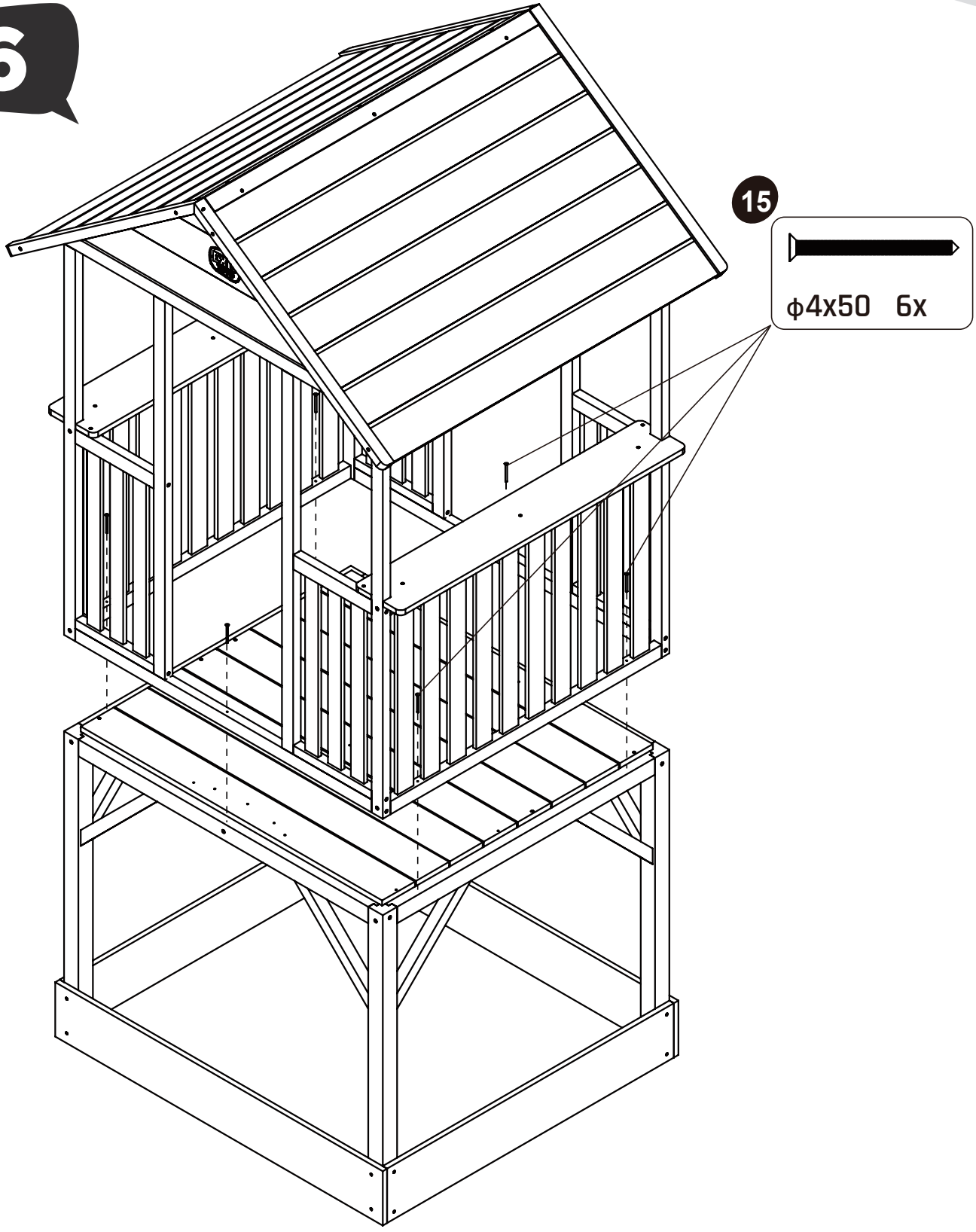

7

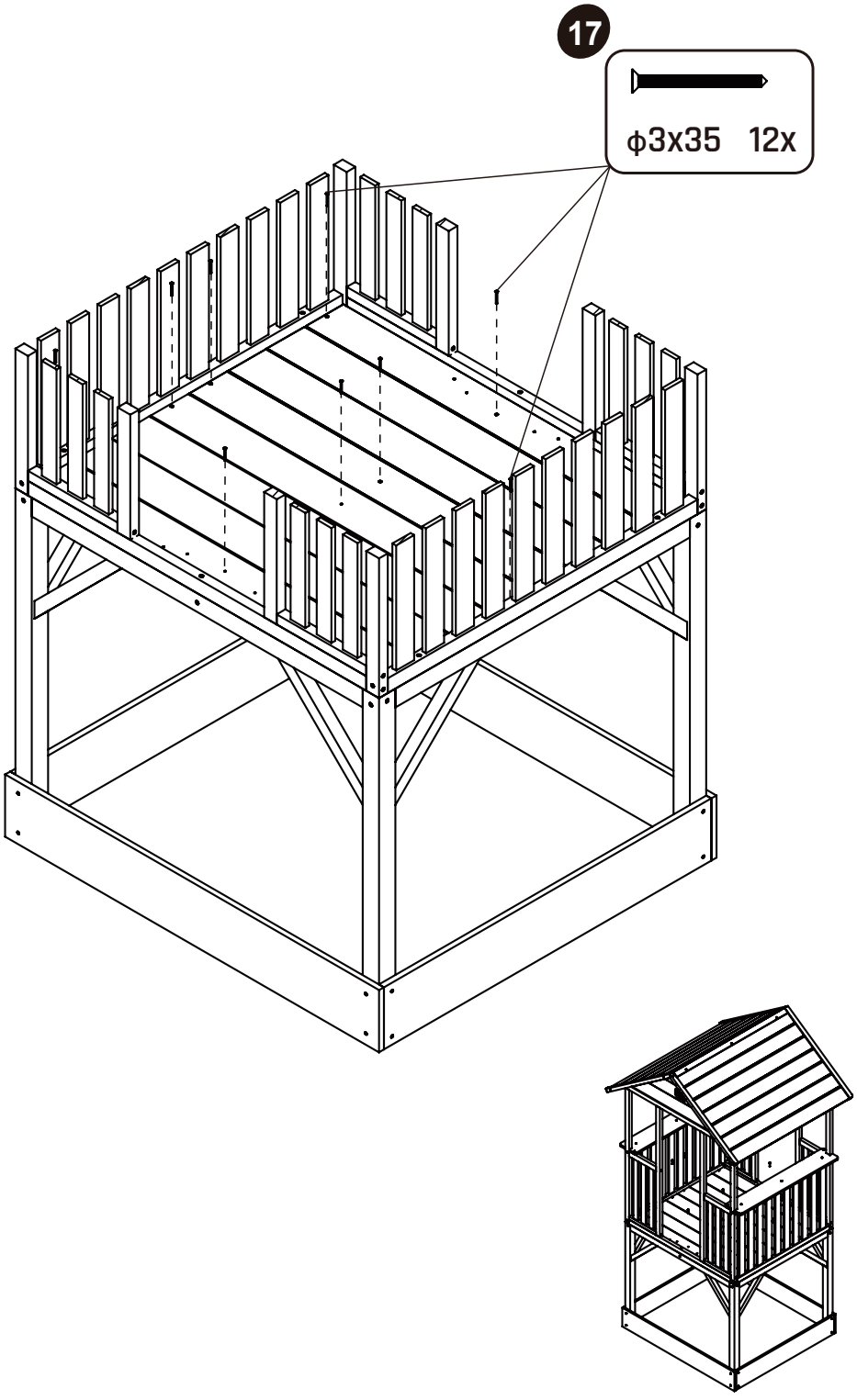

8

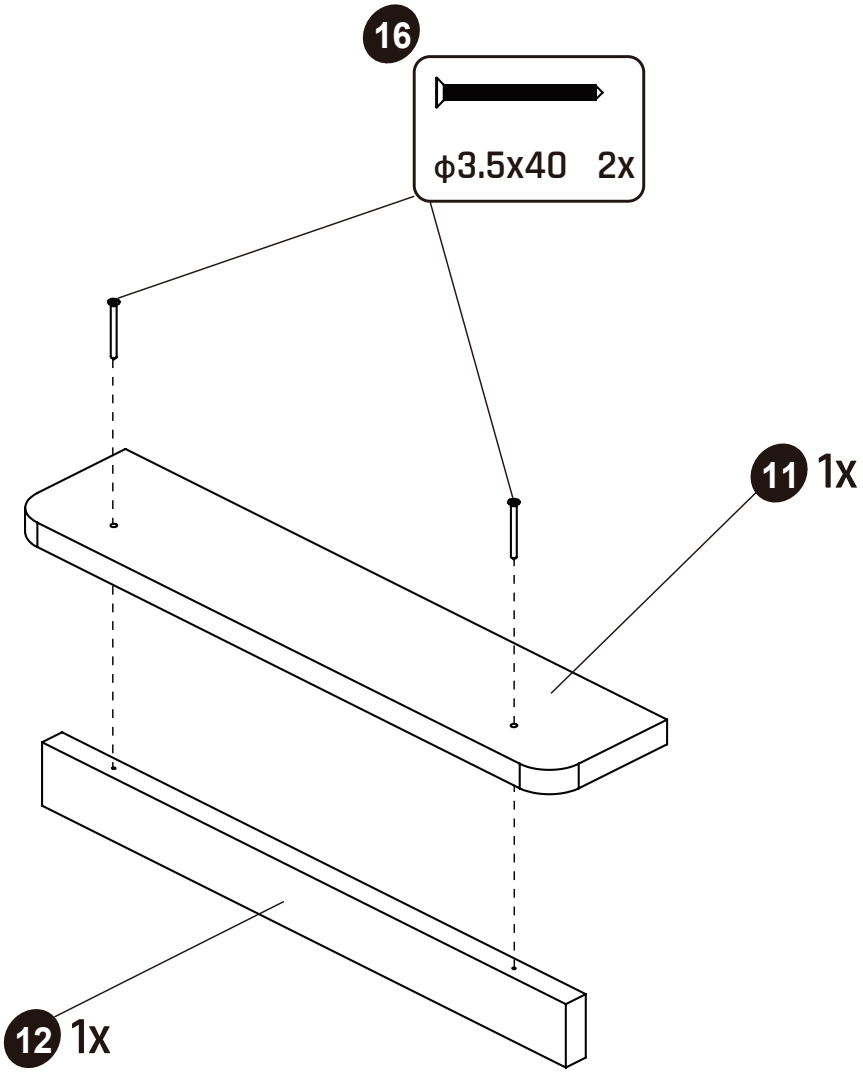

9

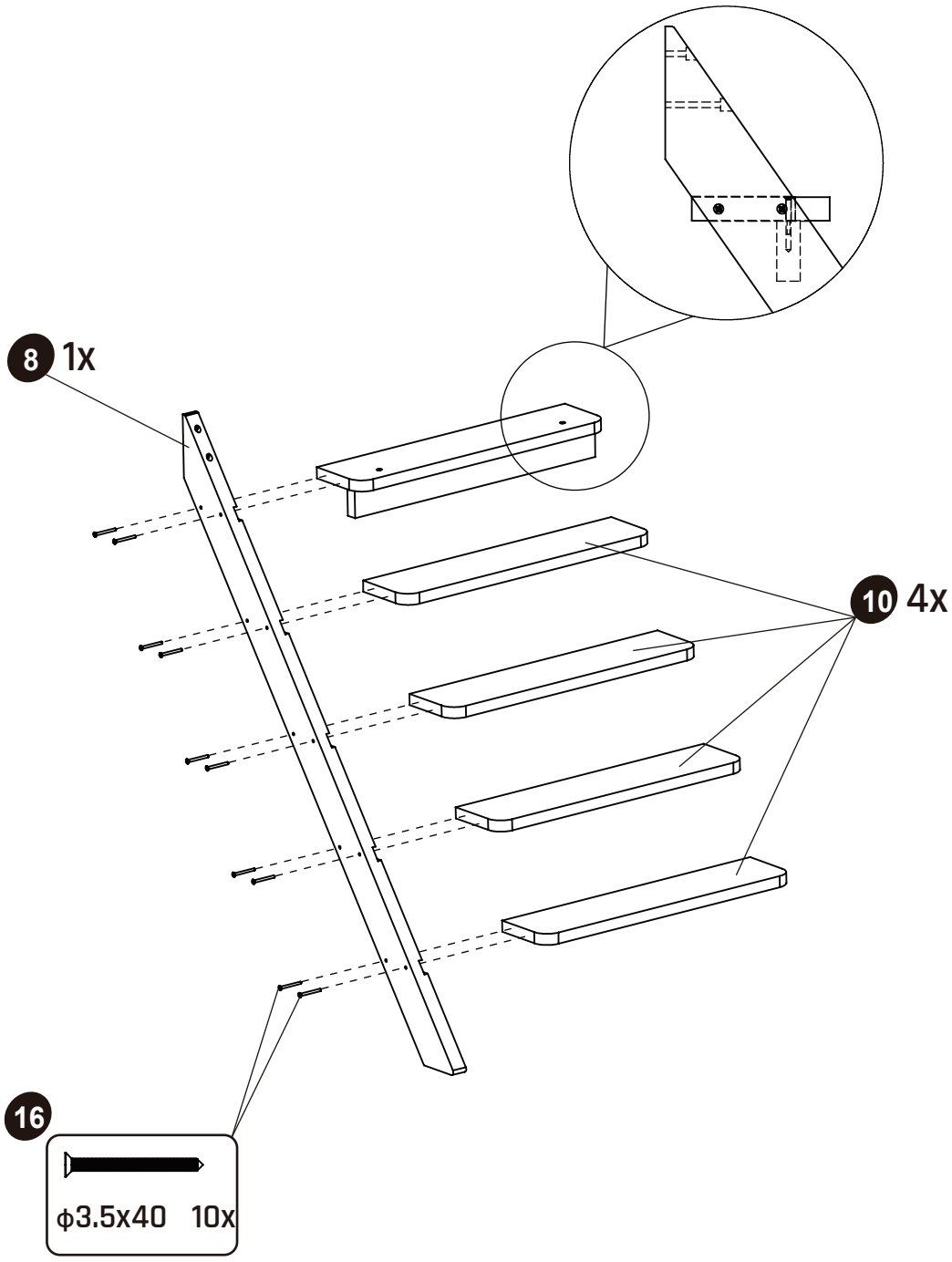

10

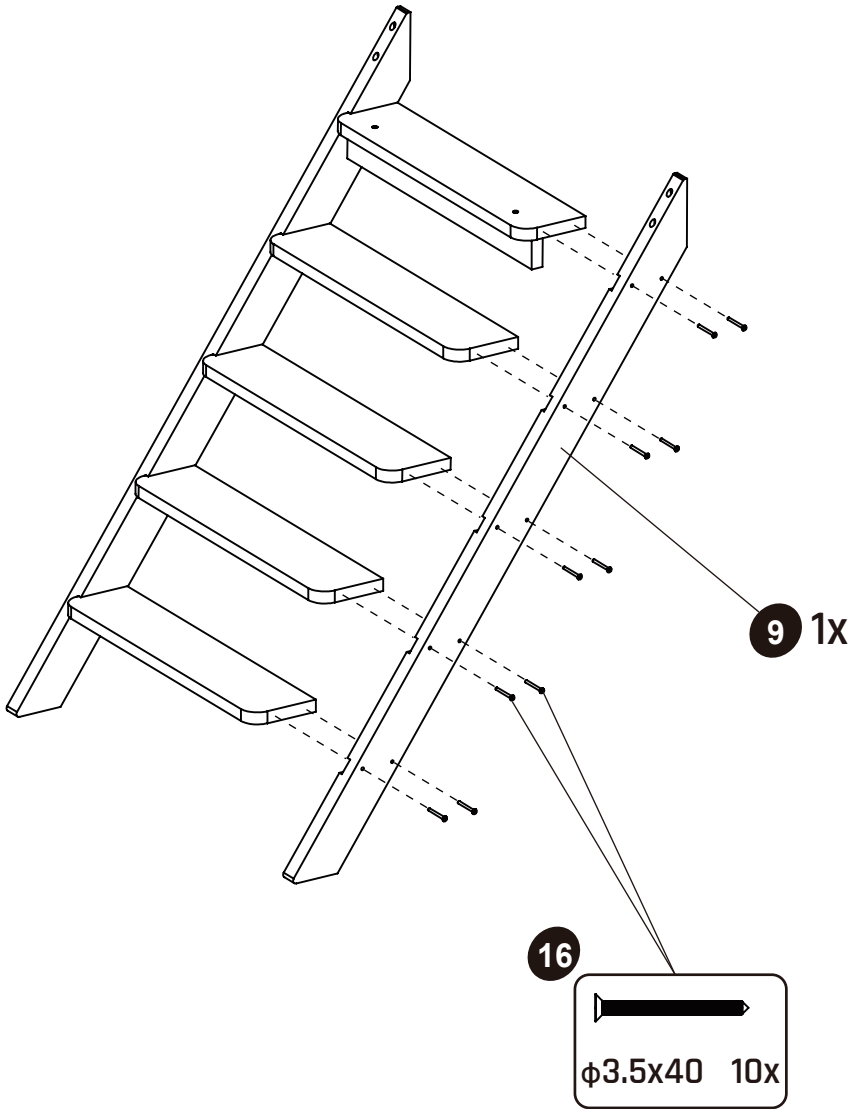

11

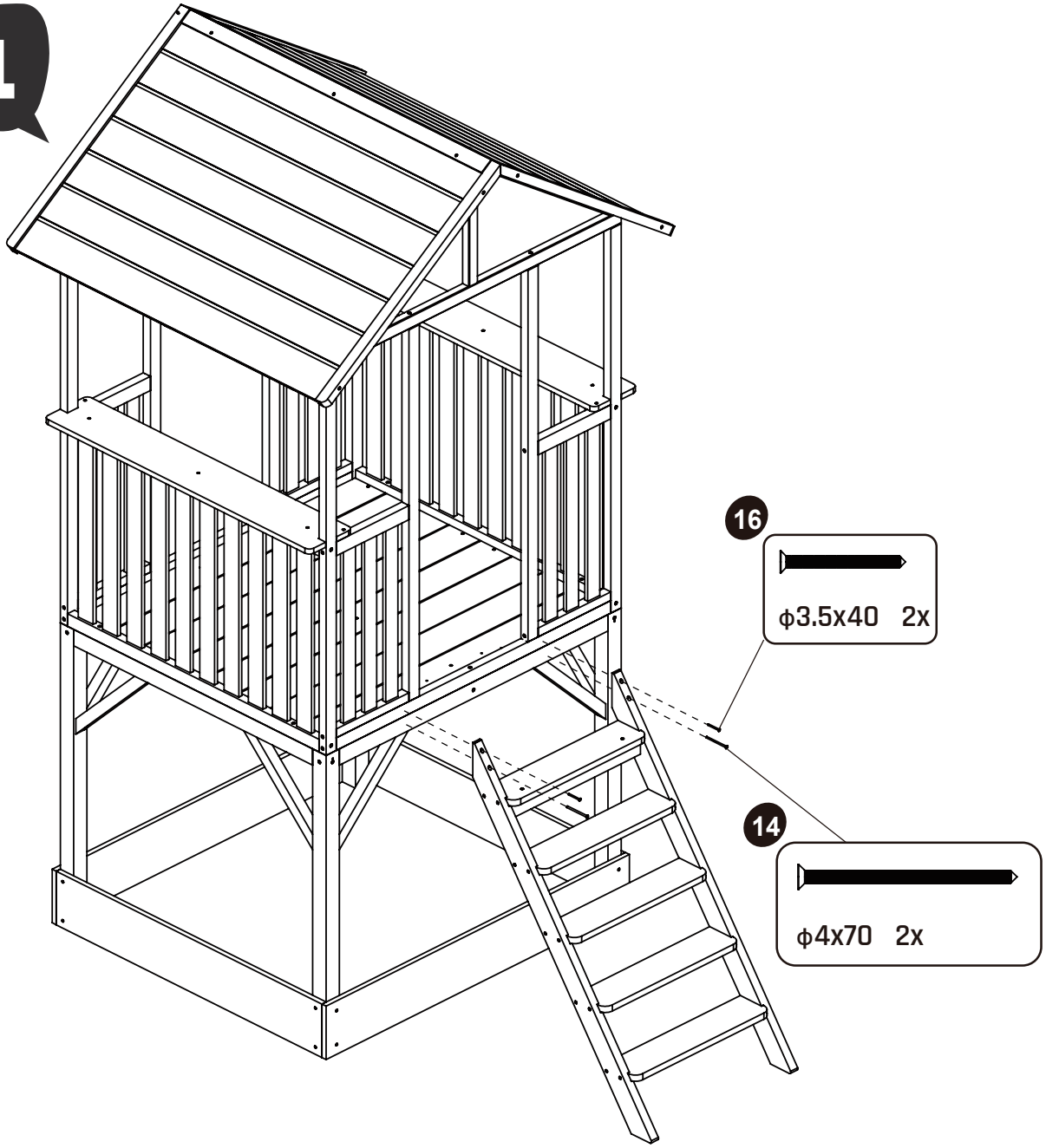

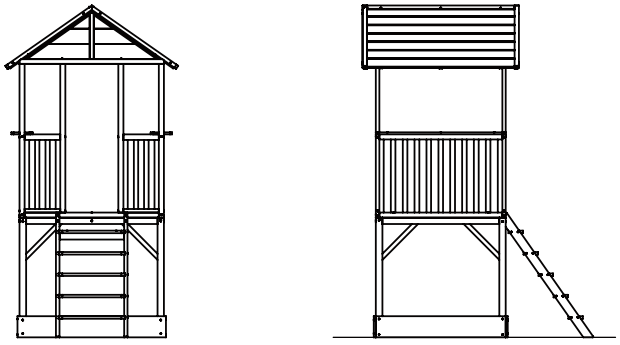

12

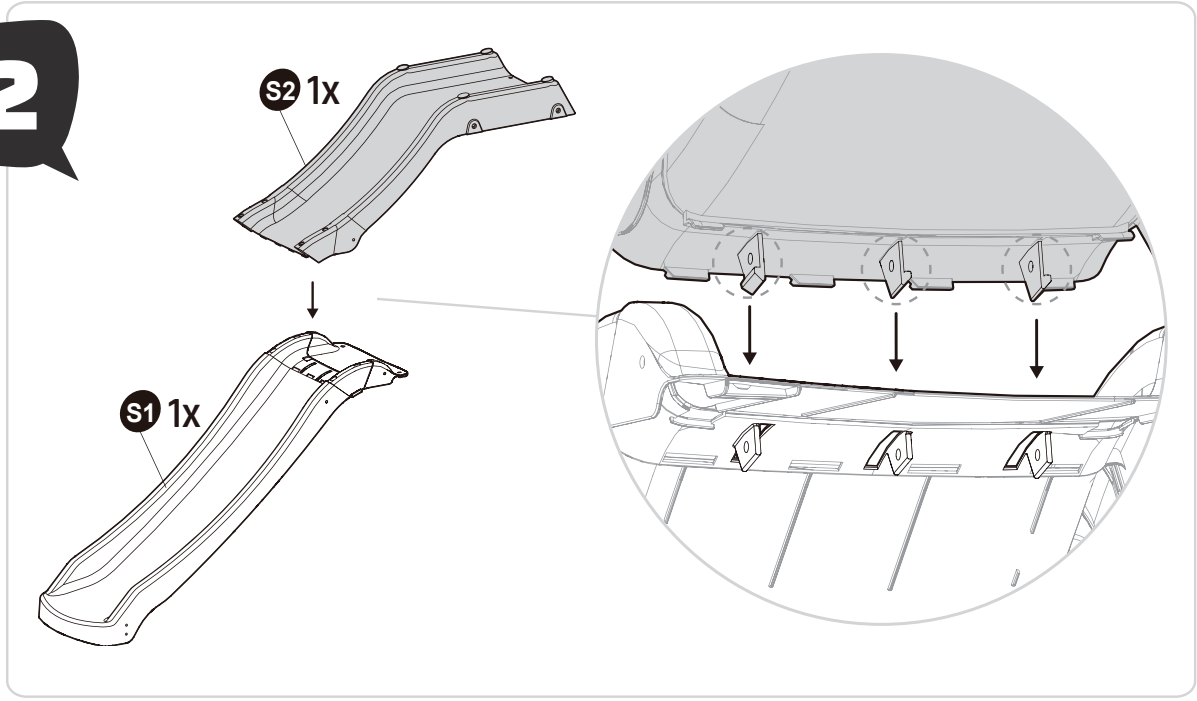

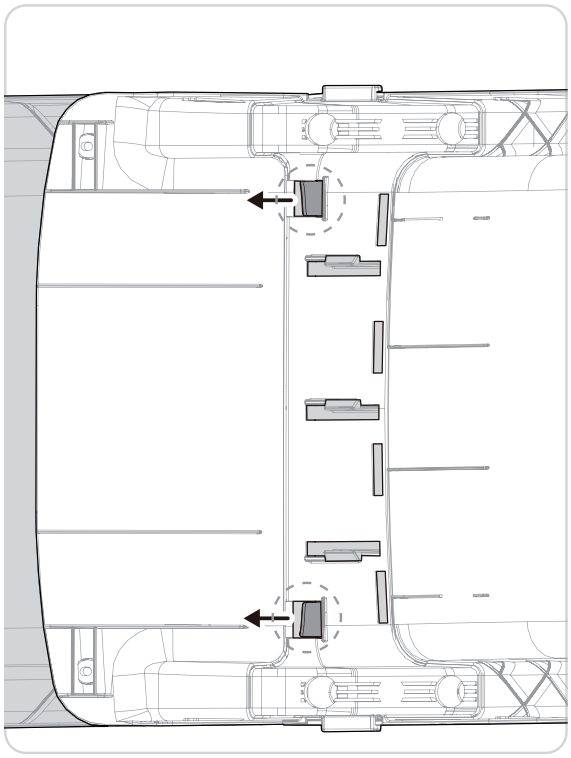

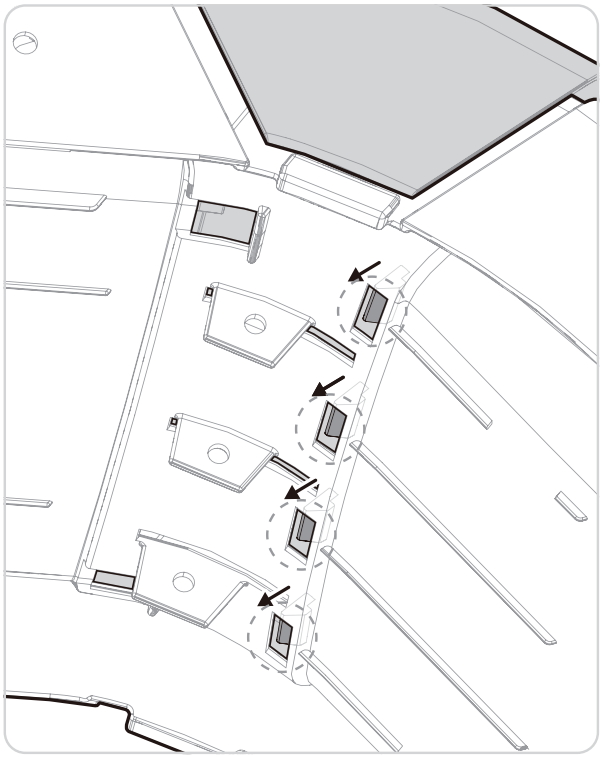

13

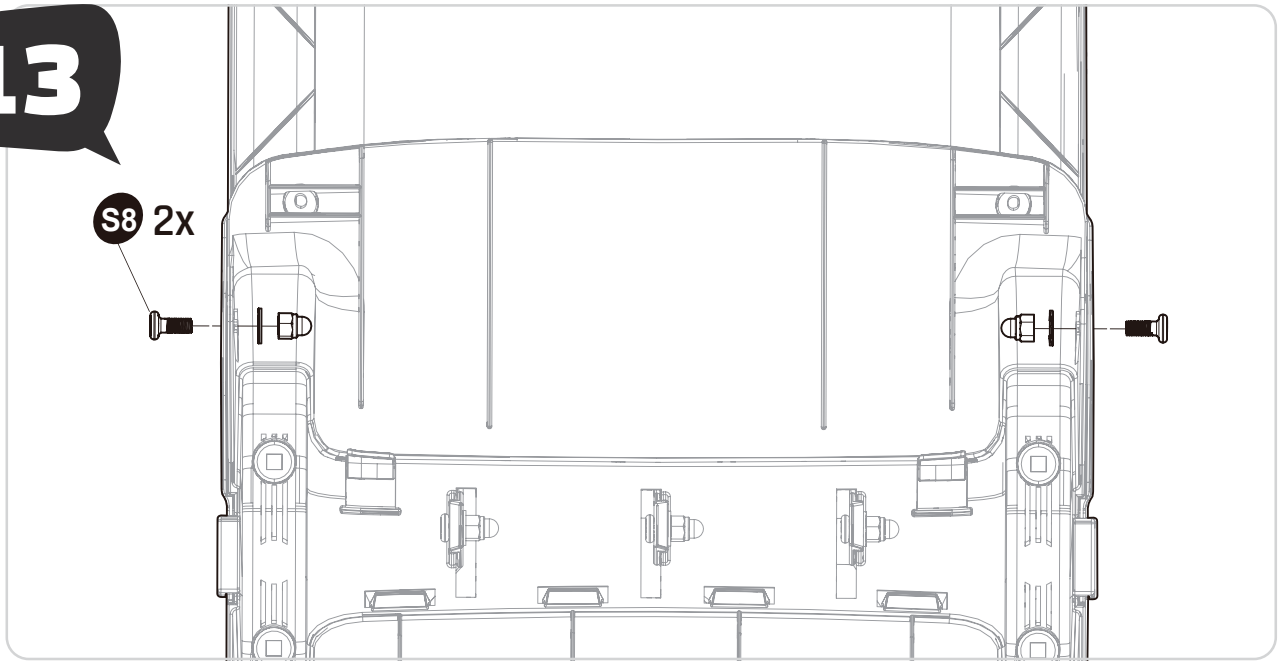

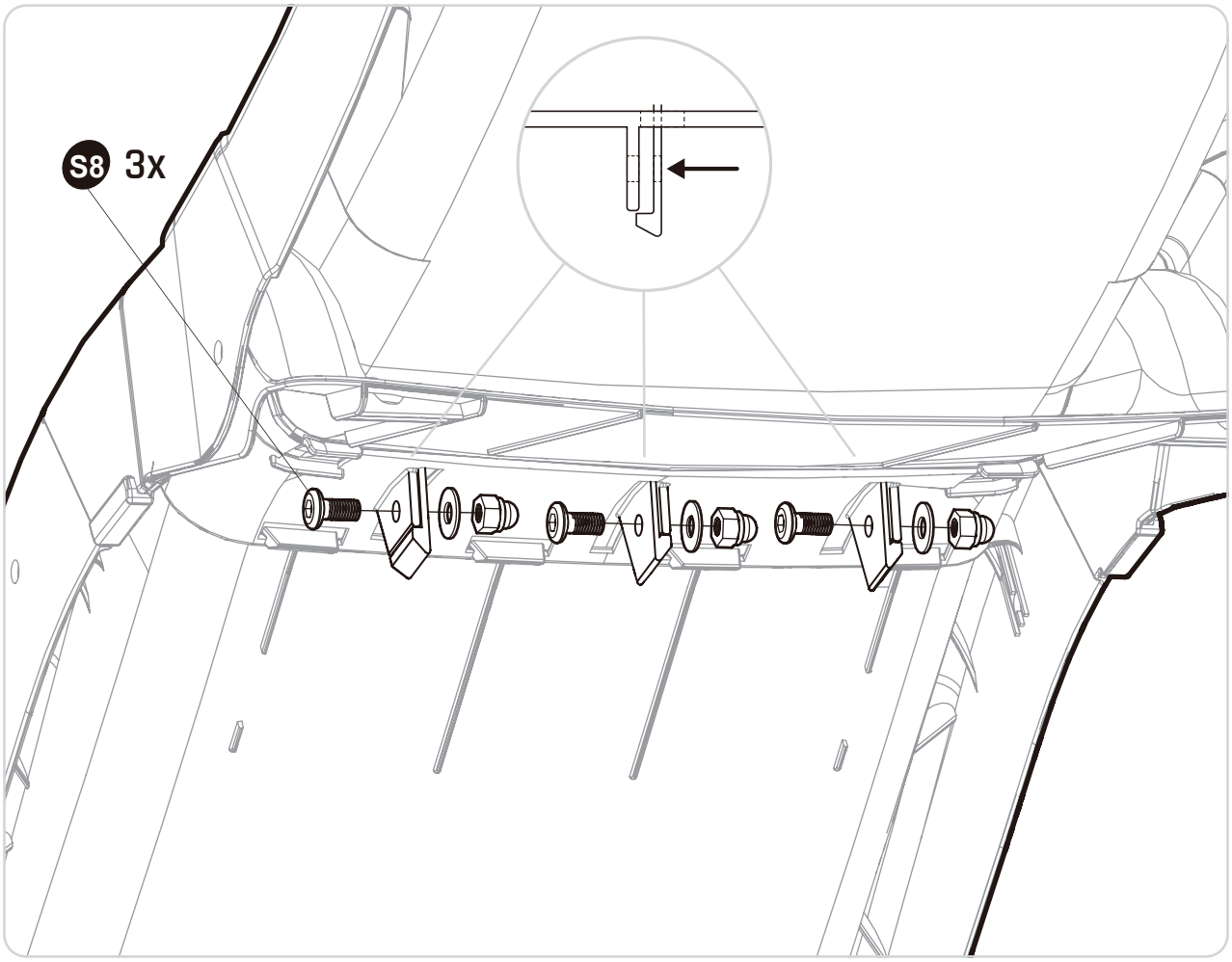

14

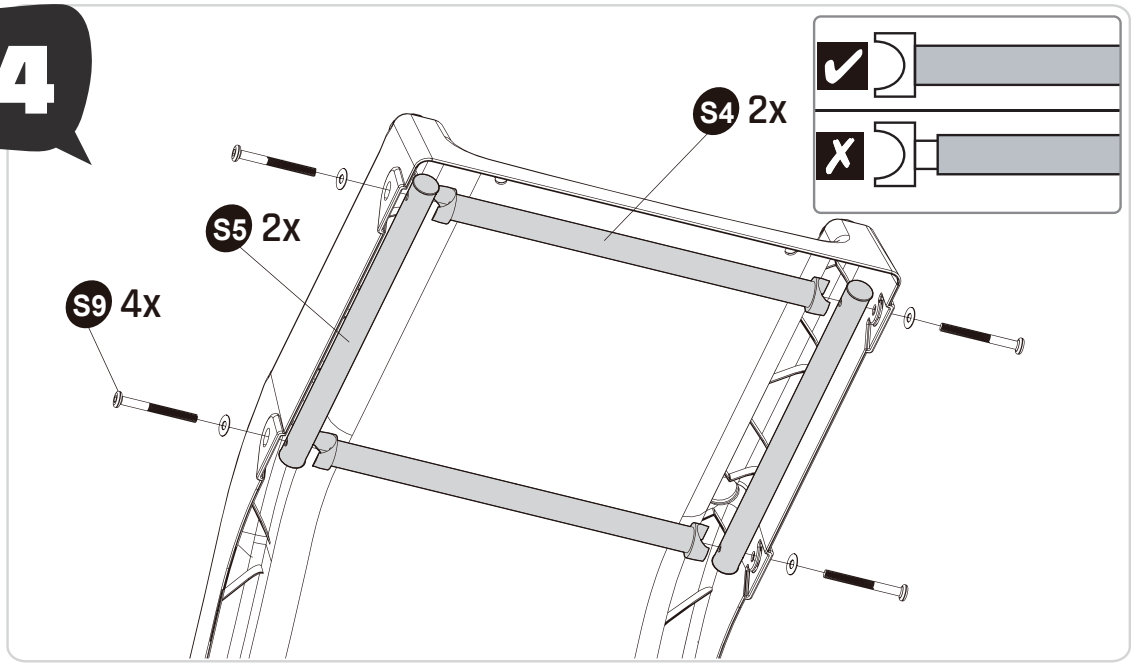

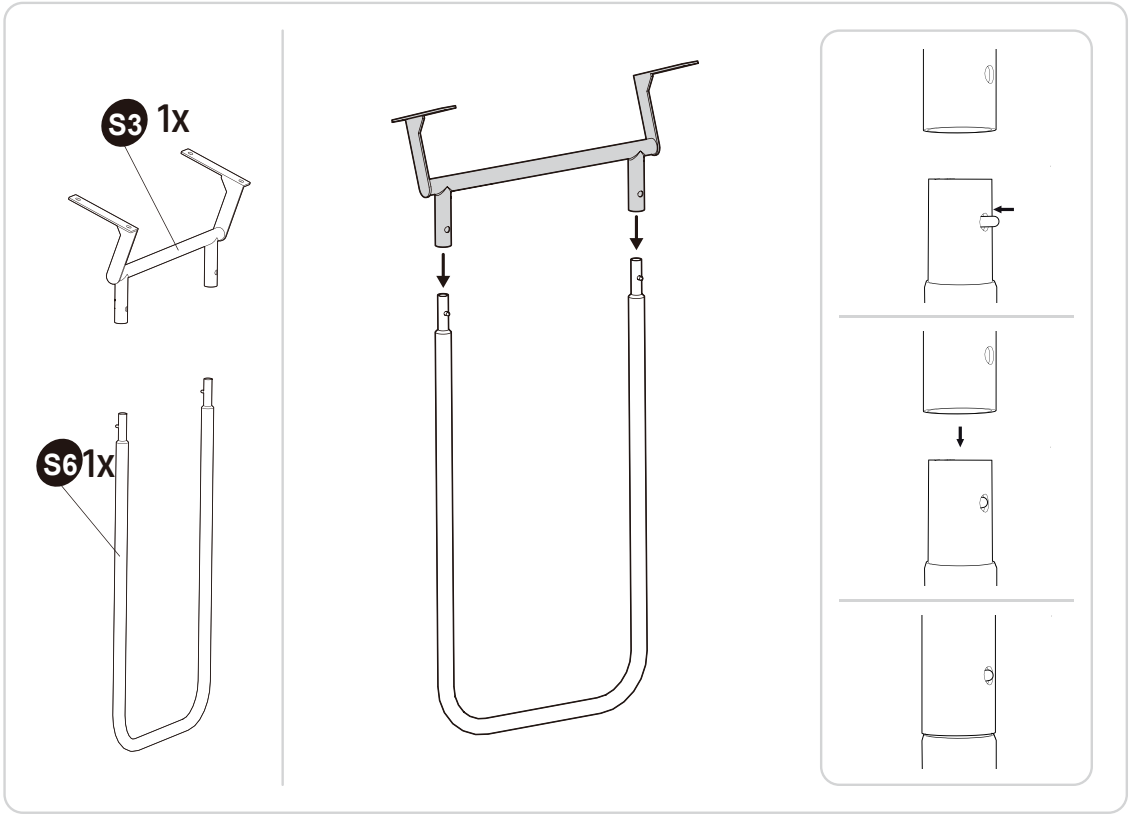

15

S8 4x

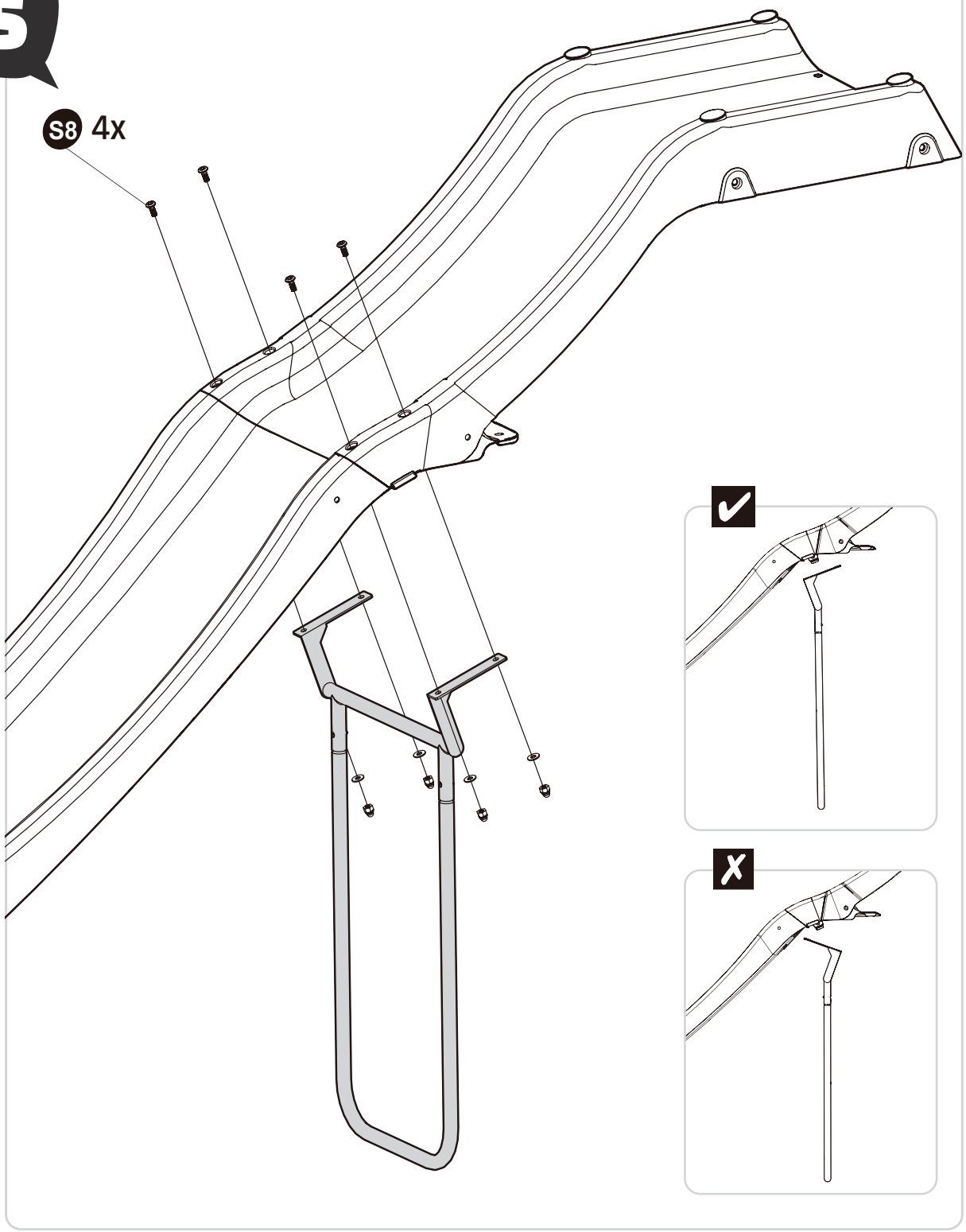

16

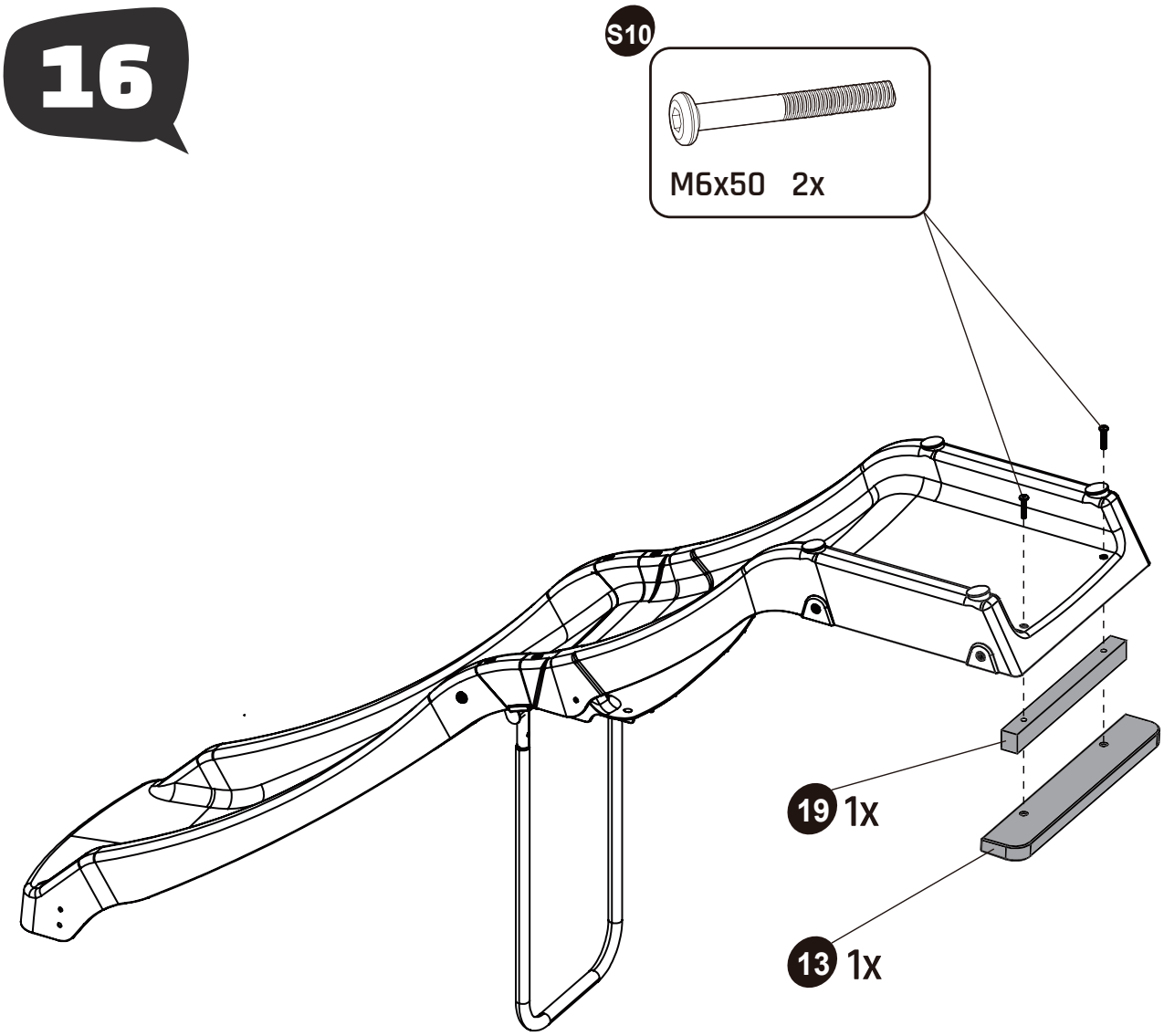

17

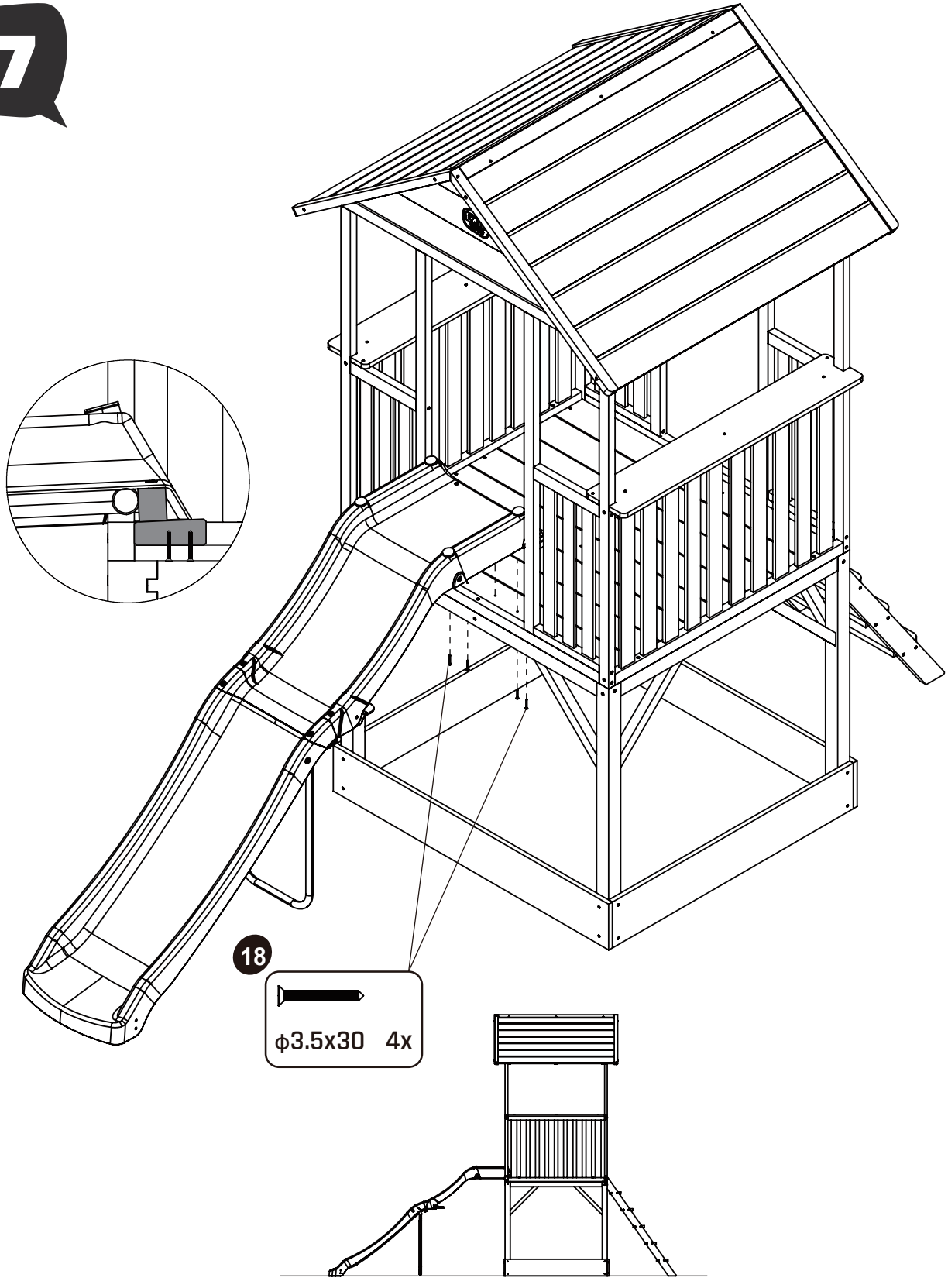

18

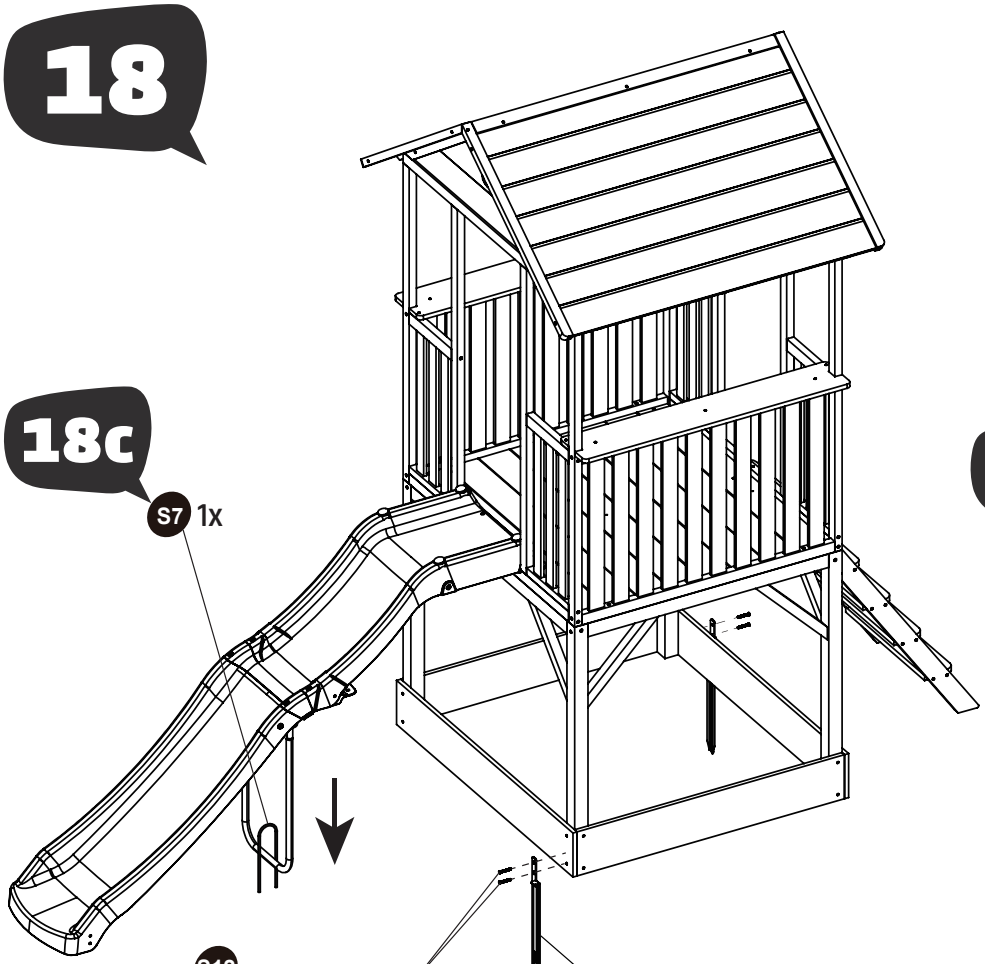

18c

S7 1x

18a

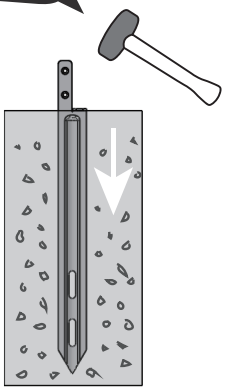

S12

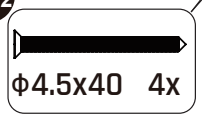

ϕ4.5x40 4x

S11 2x

18b

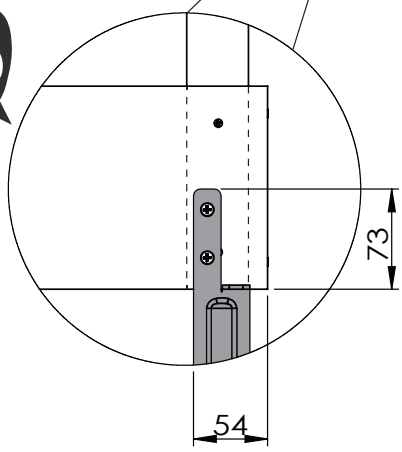

Panorama 500

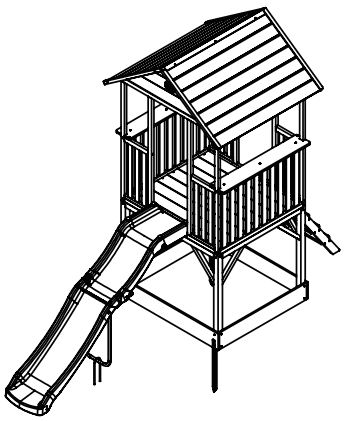

www.exittoys.com

8 721111 201231

Contact Information:

Dutch Toys Group B.V.
Edisonstraat 83
7006 RB Doetinchem, The Netherlands

info@exittoys.com
www.exittoys.com

EXIT Toys is part of:

SIMBA · DICKIE · GROUP

EXIT Toys is a registered trade mark of Dutch Toys Group