EXIT GetSet PS620

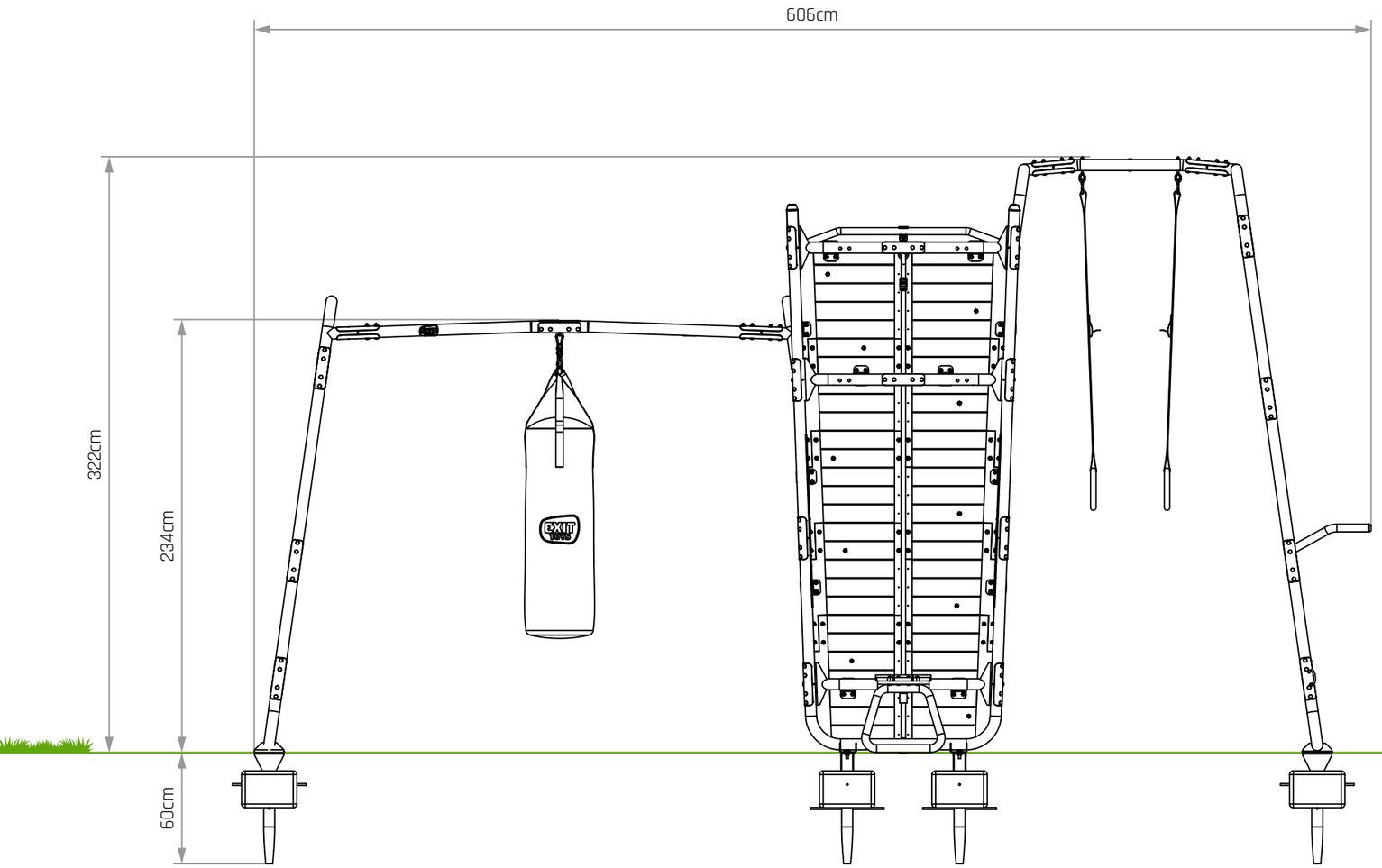

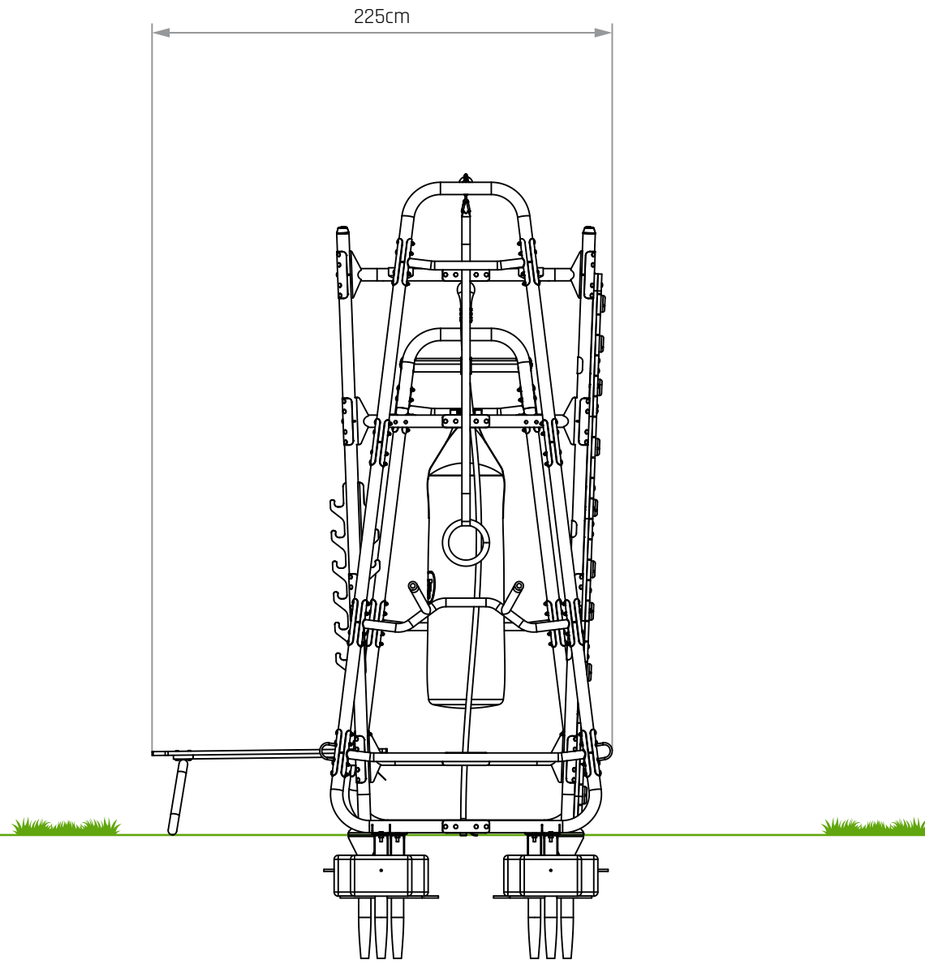
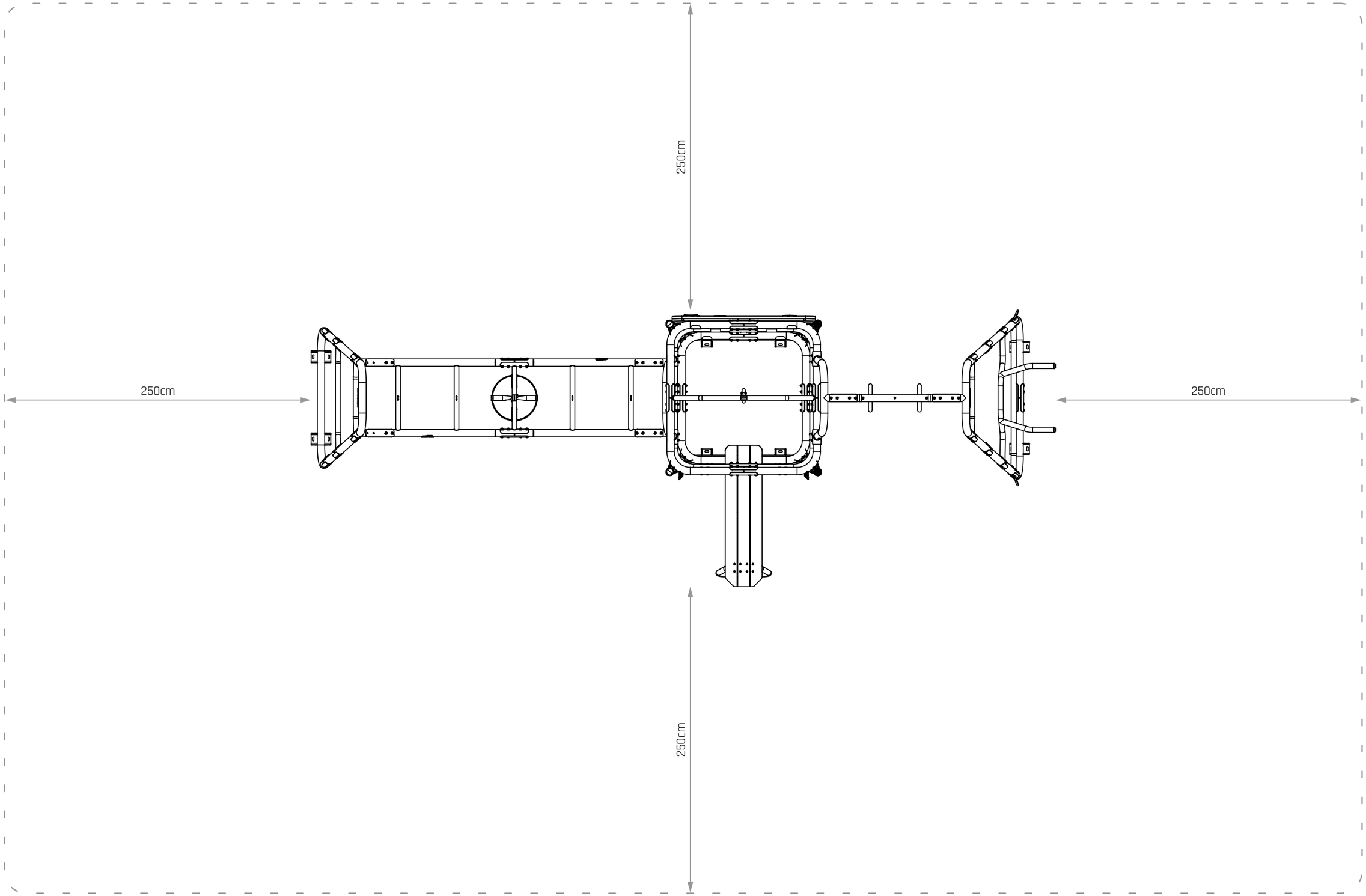
EXIT GetSet PS620